Service Manual

Model : MG180c

Service Manual

MG180c

Date: March, 2006 / Issue 1.0

REVISED HISTORY

DATE	ISSUE	CONTENTS OF CHANGES	S/W VERSION

The information in this manual is subject to change without notice and should not be construed as a commitment by LGE Inc. Furthermore, LGE Inc. reserves the right, without notice, to make changes to equipment design as advances in engineering and manufacturing methods warrant.

This manual provides the information necessary to install, program, operate and maintain the MG180c.

Table of Contents

1. Introduction 5

1.1 Purpose 5
1.2 Regulatory Information 5
1.3 Abbreviations 7

2. General Performance 9

2.1 Product Name 9
2.2 Supporting Standard 9
2.3 Main Parts: GSM Solution 9
2.4 H/W Features 10
2.5 S/W Features 12

3. H/W Circuit Description 14

3.1 RF Transceiver General Description 14
3.2 Receiver Part 14
3.3 Transmitter Part 17
3.4 Digital Baseband (DBB) Processor 20
3.5 Analog Baseband (ABB) Processor 25

4. TROUBLE SHOOTING 43

4.1 Main Components Placement 43
4.2 FPCB Components Placement 44
4.3 Baseband Components 44
4.4 Main Components (Description) 45
4.5 Power On Trouble 46
4.6 Charging Trouble 47
4.7 LCD Display Trouble 49
4.8 Receiver Trouble 51
4.9 Microphone Trouble 55
4.10 Vibrator Trouble 58
4.11 Keypad Backlight Trouble 60
4.12 SIM Detect Trouble 62
4.13 Earphone Trouble 64
4.14 RF Rx pass Trouble Shooting 68
4.15 RF Tx pass Trouble Shooting 75

5. DOWNLOAD 83

5.1 Download Setup 83
5.2 Download Procedure 84

6. SERVICE AND CALIBRATION 91

6.1 Service S/W 91

7. CIRCUIT DIAGRAM 93

8. PCB LAYOUT 98

9. ENGINEERING MODE 101

10. STANDALONE TEST 102

10.1 Setting Method 102

11. EXPLODED VIEW & REPLACEMENT PART LIST 103

11.1 EXPLODED VIEW 103
11.2 Replacement Parts
<Mechanic component> 105
<Main component> 107
11.3 Accessory 117

1. Introduction

1.1 Purpose

This manual provides the information necessary to repair, calibration, description and download the features of the MG180c

1.2 Regulatory Information

A. Security

Toll fraud, the unauthorized use of telecommunications system by an unauthorized part (for example, persons other than your company's employees, agents, subcontractors, or person working on your company's behalf) can result in substantial additional charges you're your telecommunications services. System users are responsible for the security of own system. There are may be risks of toll fraud associated with your telecommunications system. System users are responsible for programming and configuring the equipment to prevent unauthorized use. LGE does not warrant that this product is immune from the above case but will prevent unauthorized use of common-carrier telecommunication service of facilities accessed through or connected to it. LGE will not be responsible for any charges that result from such unauthorized use.

B. Incidence of Harm

If a telephone company determines that the equipment provided to customer is faulty and possibly causing harm or interruption in service to the telephone network, it should disconnect telephone service until repair can be done. A telephone company may temporarily disconnect service as long as repair is not done.

C. Changes in Service

A local telephone company may make changes in its communications facilities or procedure. If these changes could reasonably be expected to affect the use of the MG180c or compatibility with the network, the telephone company is required to give advanced written notice to the user, allowing the user to take appropriate steps to maintain telephone service.

D. Maintenance Limitations

Maintenance limitations on the MG180c must be performed only by the LGE or its authorized agent. The user may not make any changes and/or repairs expect as specifically noted in this manual. Therefore, note that unauthorized alternations or repair may affect the regulatory status of the system and may void any remaining warranty.

E. Notice of Radiated Emissions

The MG180c complies with rules regarding radiation and radio frequency emission as defined by local regulatory agencies. In accordance with these agencies, you may be required to provide information such as the following to the end user.

F. Pictures

The pictures in this manual are for illustrative purposes only; your actual hardware may look slightly different.

G. Interference and Attenuation

An MG180c may interfere with sensitive laboratory equipment, medical equipment, etc. Interference from unsuppressed engines or electric motors may cause problems.

H. Electrostatic Sensitive Devices

ATTENTION

Boards, which contain Electrostatic Sensitive Device (ESD), are indicated by the sign. Following information is ESD handling:

- Service personnel should ground themselves by using a wrist strap when exchange system boards.
- When repairs are made to a system board, they should spread the floor with anti-static mat which is also grounded.
- Use a suitable, grounded soldering iron.
- Keep sensitive parts in these protective packages until these are used.
- When returning system boards or parts like EEPROM to the factory, use the protective package as described.

1.3 Abbreviations

For the purposes of this manual, following abbreviations apply:

APC	Automatic Power Control
BB	Base Band
BER	Bit Error Ratio
CC-CV	Constant Current - Constant Voltage
DAC	Digital to Analog Converter
DCS	Digital Communication System
dBm	dB relative to 1 milli watt
DSP	Digital Signal Processing
EEPROM	Electrical Erasable Programmable Read-Only Memory
EL	Electroluminescence
ESD	Electrostatic Discharge
FPCB	Flexible Printed Circuit Board
GMSK	Gaussian Minimum Shift Keying
GPIB	General Purpose Interface Bus
GSM	Global System for Mobile Communications
IPUI	International Portable User Identity
IF	Intermediate Frequency
LCD	Liquid Crystal Display
LDO	Low Drop Output
LED	Light Emitting Diode
OPLL	Offset Phase Locked Loop
PAM	Power Amplifier Module

1. Introduction

PCB	Printed Circuit Board
PGA	Programmable Gain Amplifier
PLL	Phase Locked Loop
PSTN	Public Switched Telephone Network
RF	Radio Frequency
RLR	Receiving Loudness Rating
RMS	Root Mean Square
RTC	Real Time Clock
FEM	Front End Module
SIM	Subscriber Identity Module
SLR	Sending Loudness Rating
SRAM	Static Random Access Memory
STMR	Side Tone Masking Rating
TA	Travel Adapter
TDD	Time Division Duplex
TDMA	Time Division Multiple Access
UART	Universal Asynchronous Receiver/Transmitter
VCO	Voltage Controlled Oscillator
VCTCXO	Voltage Control Temperature Compensated Crystal Oscillator
WAP	Wireless Application Protocol

2. General Performance

2.1 Product Name

MG180c : Support GPRS (Class 10)

2.2 Supporting Standard

Item	Feature	Comment
Supporting Standard	E-GSM/DCS/PCS Triple Band Phase 2+ SIM Toolkit : Class 1,2,3	
Frequency Range	EGSM TX : 880 - 915 MHz EGSM RX : 925 -960 MHz DCS TX : 1710 - 1785 MHz DCS RX : 1805 - 1880 MHz PCS TX : 1850 - 1910 MHz PCS RX : 1930 - 1990 MHz	
Application Standard	WAP 1.2.1 MMS	

2.3 Main Parts: GSM Solution

	MG180c
Digital Baseband	Calypso-AMR C035(D751992GHH)
Analog Baseband	IOTA(TWL3025)
RF Chip	Aero-2 (SI4210)

2.4 H/W Features

Item	Feature	Comment
Form Factor	Single Color BAR	Main LCD : CSTN, 101 x 80
Battery	1) Capacity Standard : Li-Ion 830mAh	
	Packing Type: Inner Pack	
Size	Standard : 101 x 44 x 15.9 mm	L x W x H
Weight	72.5 g	With Battery
PCB	Main PCB : 8Layers, 1t	
AVG TCVR current (mA)	Max : 120mA (Power Level 19) Max : 310mA (Power Level 5)	
Standby Current	4 mA	@ Paging Period 6
Standby time	Up to 200 hours	@ Paging Period 6
Charging time	Below 3 hours	@ Power Off /1000mAh
Talk time	Min 2.5hr @Power Level 5	@ 800 mAh
RX sensitivity	EGSM : -105 dBm DCS : -105 dBm, PCS : -105 dBm	
TX output power	EGSM : 32.5 dBm DCS : 30.5 dBm, PCS : 30 dBm	Class4 (GSM850, EGSM) Class1 (DCS, PCS)
GPRS compatibility	GPRS Class 10	
SIM card type	Plug-In SIM 3V	
Display	-Main LCD : 65K CSTN (101 x 80) -Backlight : White	
Keypad	Alphanumeric Key : 12 Function Key : 9 Total Number of Keys : 21	Function Key: 4 Key Navigation, F1, F2, SND, END/PWR, Clear

Item	Feature	Comment
Antenna	Internal Type	Triple-band
System connector	24 Pin	
Ear Phone Jack	3 Pole (ϕ2.5mm)	
PC synchronization	No	CDROM
Memory	Flash : 64Mbit / SRAM :32Mbit	Spansion
Speech coding	FR, EFR, HR, AMR	
Data & Fax	Built in Data & Fax support	
Vibrator	Built in Vibrator	
MIDI (for Buzzer Function)	40 Poly	Buzzer Function By Using MIDI IC
Voice Recording	No	
Travel Adapter	Yes	
Options	Ear-Microphone Data Cable Cigarette Lighter Adapter	

2.5 S/W Features

Item	Feature	Comment
RSSI	0~5 level	
Battery Charging	0~4 level	
Key Volume	0~5 level	
Keypad Volume	0~5 level	
Effect sound volume	0~5 level	
Ring Volume	0~5 level	
Time/Date Display	Yes	
Text Input	T9	
Multi-language	Yes	
Quick Access Mode	Phone Book / Web Access / Sound / Message / IM / Gallery	
PC Sync	Schedule/Phonebook/SMS	MS Scheduler & Outlook
Speed Dial	Yes (2~9)	Voice mail center → 1 key
Profile	Yes	
CLIP/CLIR	Yes	
Phonebook	3 Number + 1 Memo + 1 e-mail	Phone (Up to 255 entries)
Last Dial Number	Yes (20)	
Last Received Number	Yes (20)	
Last Missed Number	Yes (10)	
Search Number/Name	Yes	
Group	7 / User Editor	
Fixed Dial Number	Yes	
Voice Memo	30 secs * 3	
Call Remainder	Yes	
Network Selection	Automatic / Manual	

Item	Feature	Comment
Mute	Yes	
Call Divert	Yes	
Call Barring	Yes	
Call Charge	Yes	
Call Duration	Yes	
SMS (EMS) Send/Receive/Save	100	Melody/Picture/Animation
MMS	Yes	
WAP Browser	WAP 2.0	
Java	CLDC v1.0.3 / MIDP v1.0.3	
Wall Paper	Yes	Max. 10 preset
Download Melody/ Wallpaper (MMS)	Over the WAP	
Long Message	Max. 918 Character(6page*153)	
Cell Broadcast	Yes	
Calendar	Yes	
Memo	20	
World Clock	Yes	
Unit Convert	Length/Surface/Volume/Weight	
Fax & Data	Yes	
SIM Lock	Yes	Operator Dependent
SIM Toolkit	Class 1,2,3	
Phone lock	Yes	
Security	DRM (Forward-lock only)	
CPHS	Yes	
IM	Yes	

3. H/W Circuit Description

3.1 RF Transceiver General Description

The RF parts consist of a transceiver part, a power amplifier part, a front-end module part, a voltage supply part, and a VC-TCXO part.
The AeroII transceiver is composed of single RF chipset, Si4210-GM[U501] which is a quad-band GSM/GPRS wireless communications. This device integrated a receiver based on a low IF (200KHz) architecture and a transmitter based on modulation loop architecture. The transceiver employed a 3 wire serial interface to allow an external system controller to write the control registers for dividers, receive path gain, power down setting, and other controls.

3.2 Receiver Part

The receiver part uses a low-IF receiver architecture that allows for the on-chip integration of the channel selection filters, eliminating the external RF image reject filters and the IF SAW filter required in conventional super-heterodyne architecture.
The Si4210-GM[U501] integrates four differential input LNAs that are matched to the 200 Ohm balanced-output SAW filters through external LC matching networks. A quadrature image-rejection mixer downconverts the RF signal to a 200kHz intermediate frequency (IF) with the RFLO from the frequency synthesizer.
The mixer output is amplified with an analog programmable gain amplifier (PGA) and quadrature IF signal is digitized with high resolution A/D converters (ADCs). The Si4210-GM[U501] downconverts the ADC output to baseband with a digital 200kHz quadrature LO signal. Digital decimation and IIR filters perform digital filtering , and remove blocking and reference interference signals. After filtering, the digital output is scaled with digital PGA, which is controlled with the DGAIN[5:0] bits in register 20h. The amplified digital output signal go through with DACs that drive a differential analog signal onto the RXIP,RXIN,RXQP and RXQN pins to interface to standard analog ADC input baseband ICs.

	Antenna Bar Number	Rx Power (dBm)
Antenna Display	5 → 4	-85dBm±2dBm
	4 → 3	-90dBm±2dBm
	3 → 2	-95dBm±2dBm
	2 → 1	-100dBm±2dBm
	1 → 0	-105dBm±2dBm

Table 3-1. Antenna Display

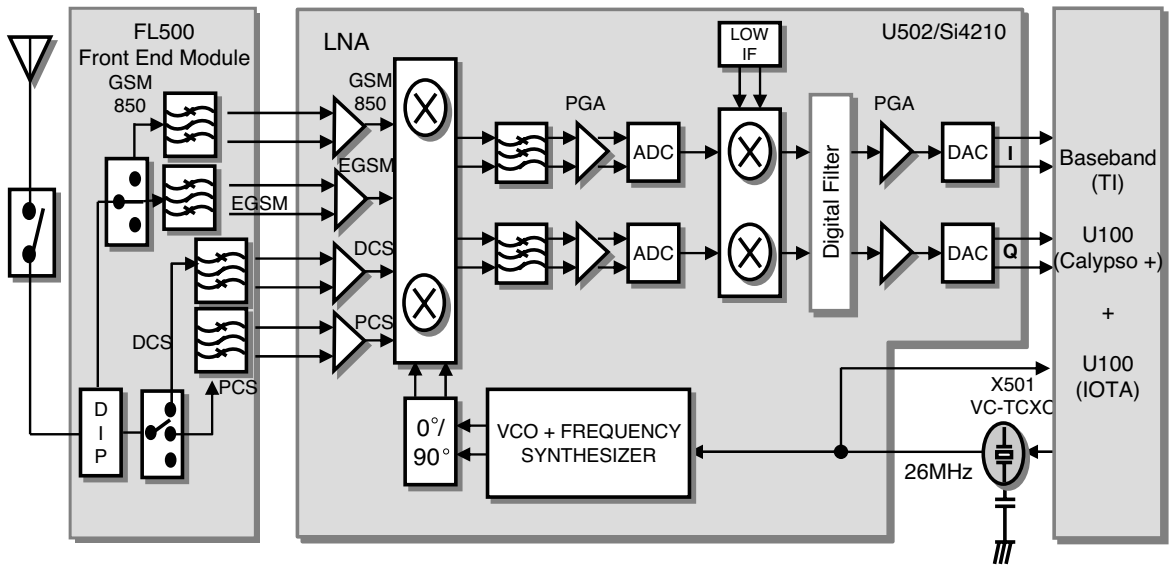

Figure 1. RF Receiver Block

3.2.1. RF Front End

RF front end consists of Front End Module(FL500), quad band LNAs integrated in transceiver(U502). The Received RF signals (GSM-850 869MHz ~ 894MHz, EGSM 880 MHz ~ 960MHz, DCS 1710 MHz ~ 1880 MHz, PCS 1930MHz ~ 1990MHz) are fed into the antenna or mobile switch. An antenna matching circuit is between the antenna and the mobile switch. The Front End Module(FL500) is used for control the Rx and TX paths. And the input signals ANT_SW1 and ANT_SW2 of a FL500 are directly connected to baseband controller to switch either TX or RX path on. Front End Module(FL500) is an antenna switch module for Quad band phone. The logic and current is given below Table 3-2.

	ANT_SW1(PIN 15)	ANT_SW1 2(PIN 14)	Current
GSM 850/EGSM RX	0 V	0 V	< 0.1 mA
DCS/PCS RX	2.5~3.0 V	0 V	< 0.1 mA
GSM-850/EGSM TX	0 V	2.5~3.0 V	< 0.1 mA
DCS/PCS TX	2.5~3.0 V	2.5~3.0 V	< 0.1 mA

Table 3-2. The Logic and Current

3.2.2. Synthesizer

The Aero II transceiver integrates two complete PLLs including VCOs, varactors, resonators, loop filters, reference and VCO dividers, and phase detectors. The RF PLL uses two multiplexed VCOs. The RF1 VCO is used for receive mode, and the RF2 VCO is used for transmit mode. The IF PLL is used only during transmit mode. All VCO tuning inductors are also integrated. The IF and RF output frequencies are set by programming the N-Divider registers, NRF1, NRF2 and NIF. Programming the N-Divider register for either RF1 or RF2 automatically selects the proper VCO.

Transmit modes should always use f∅ = 200kHz. The IF and RF output frequencies are set by programmi ng the N-Divider registers and also programmed via 3-wire interface with external system controler.

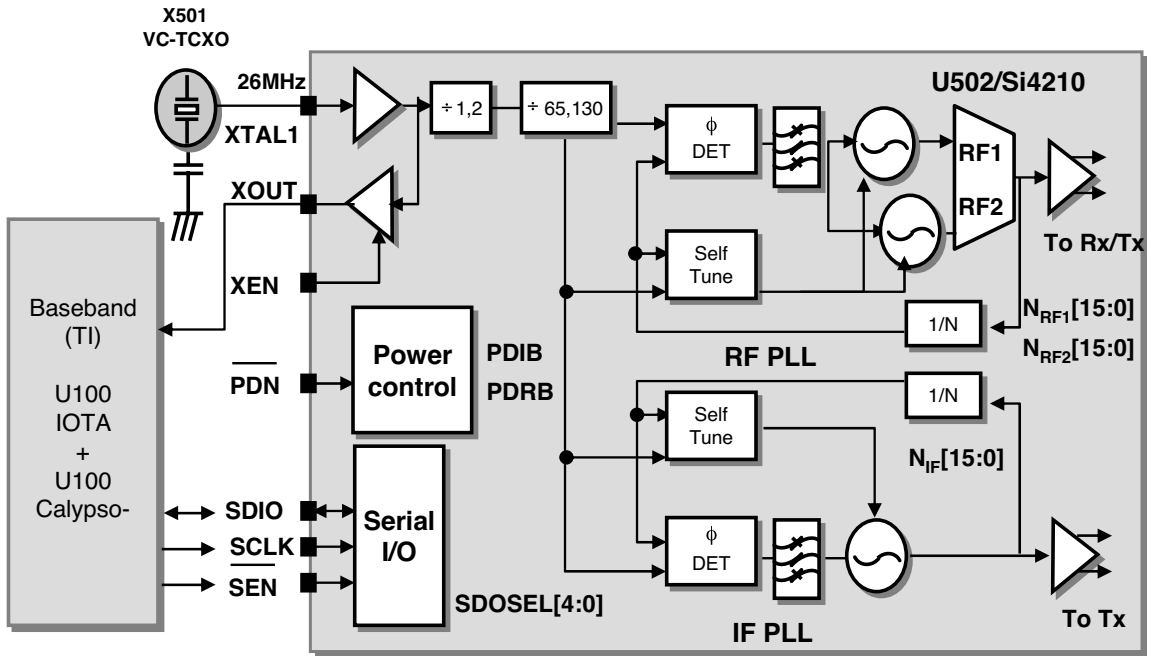

Figure 2. Synthesizer Block

3.3 Transmitter Part

The Transmitter part contains the transmitter parts of Si4210-GM[U501], Power Amp Module[U501] and Front End Module[FL500]. The transmit section of Si4210-GM[U502] consists of an I/Q base band up_converter, an offset phase-locked loop(OPLL) and two output buffers that can drive external power amplifiers(PA). The RF GMSK outputs from the transmit VCO are fed directly to the RF power amplifiers. The peak output power and the profile of the transmitted burst are controlled by means of incorporated pow er control circuits inside of PA and DAC output from the Base band Controller. The PA outputs pass to the antenna connector via Front End Module.

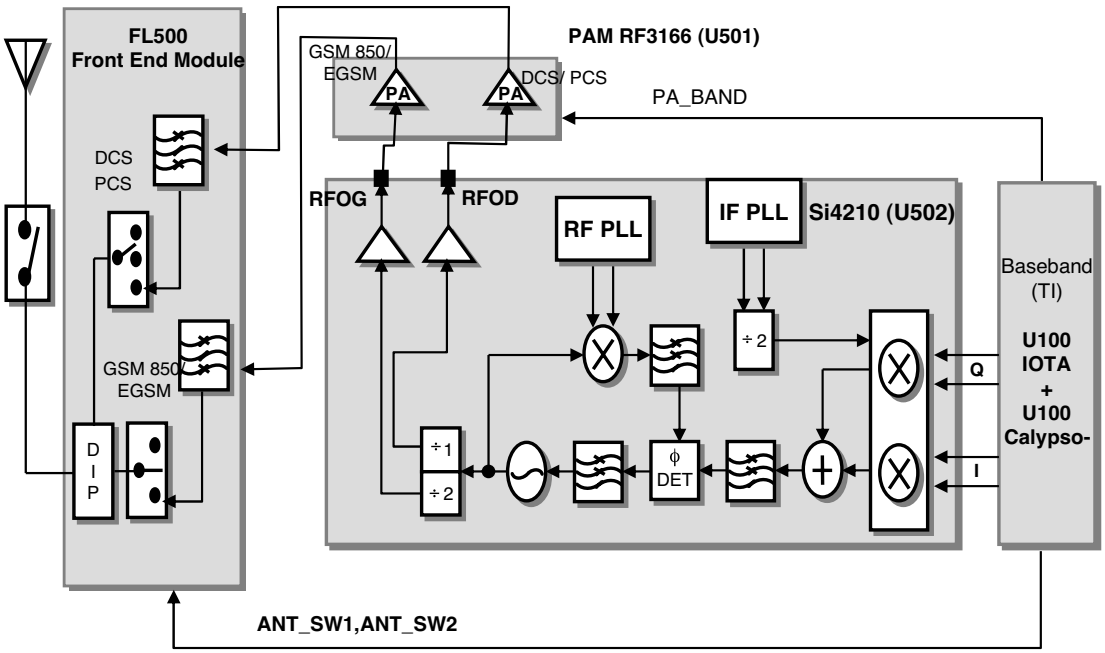

Figure 3. RF Transmit Block

3.3.1. Power Amplifier

The RF3166 [U500] is a quad-band EGSM 900/GSM 850/DCS/PCS power amplifier module that incorporat es an indirect closed loop method of power control. The indirect closed loop is fully self-contained and it do es not require loop optimization. It can be driven directly from the DAC output in the baseband circuit. On-board power control provides over 37 dB of control range with an analog voltage input(Vramp). Efficien cy is 60% at GSM and 55% at DCS/PCS.

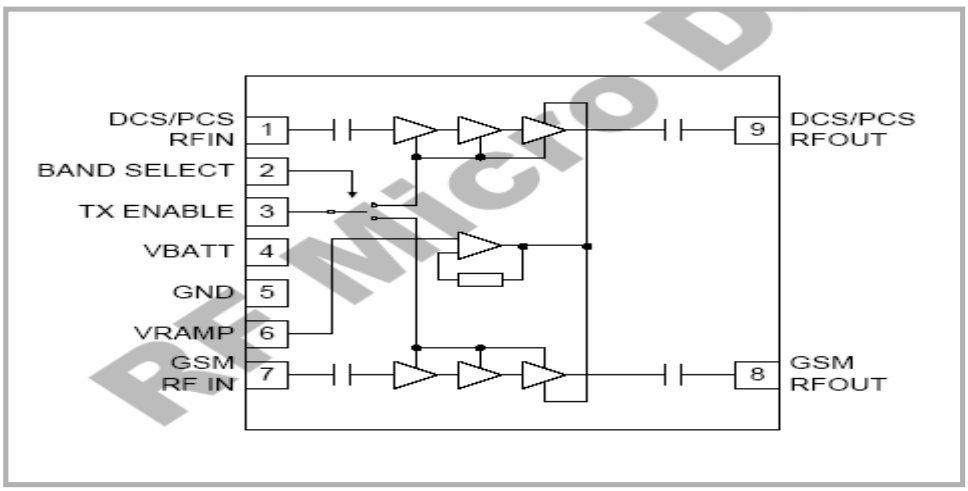

3.3.2. 26MHz Clock

The 26 MHz clock consists of a TCXO(Temperature Compensated Crystal Oscillator) which oscillates at a frequency of 26 MHz. It is used within the Si4210 RF Main Chip, BB Analog chip-set(IOTA), Digita l chip-set(Calypso-).

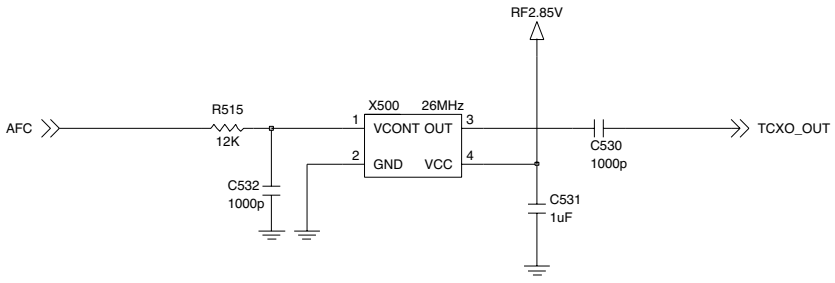

Figure 5. VC-TCXO Circuit

3.3.3. Power Supplies and Control Signals

An external regulator(U502) is used to provide DC power to RF part. Every RF component except power amp module uses this external regulator.

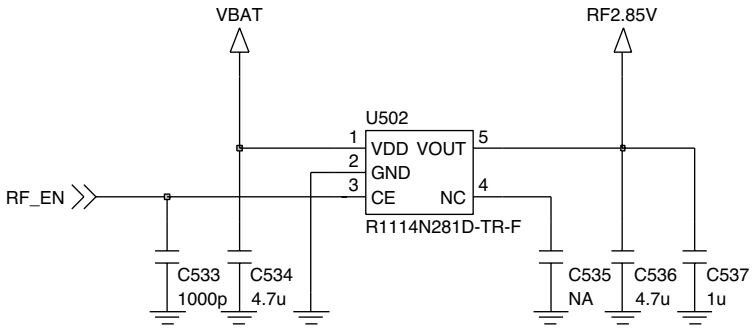

Figure 6 External regulator Circuit

3.4 Digital Baseband (DBB) Processor

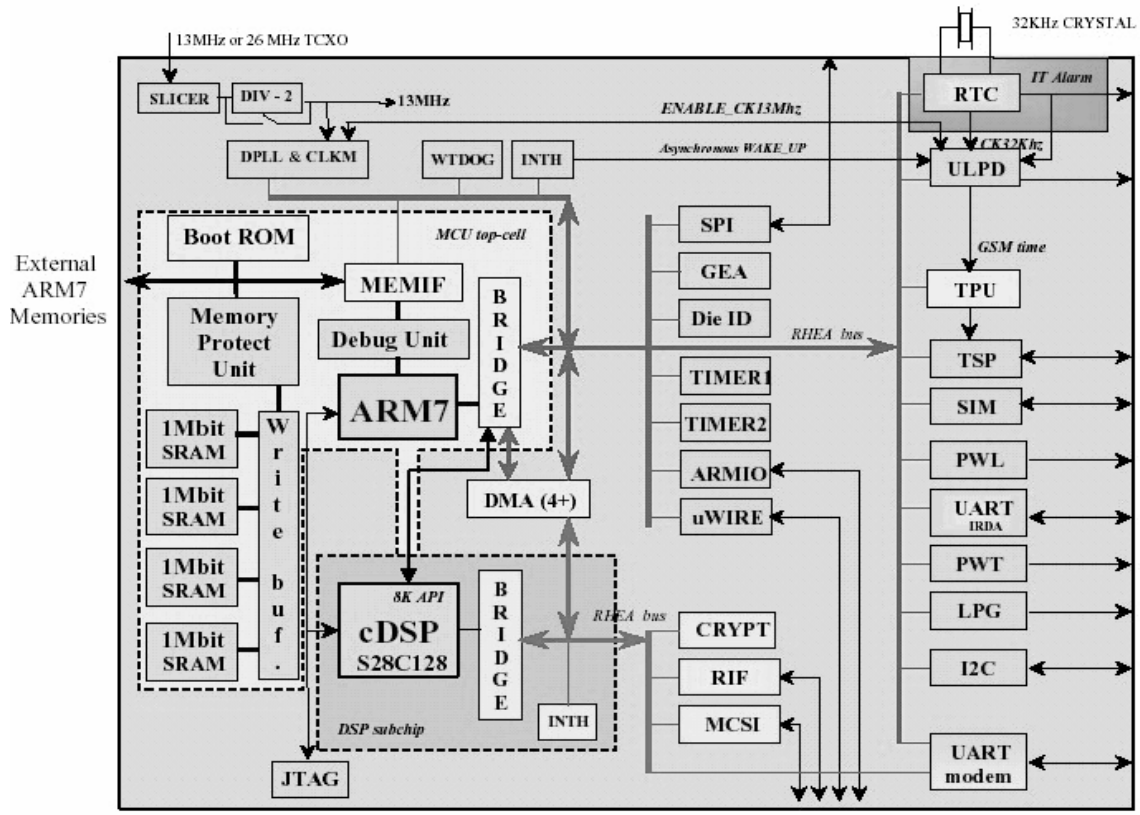

Figure 7. Top level block diagram of the Calypso-

3.4.1. General Description

CALYPSO is a chip implementing the digital base-band processes of a GSM/GPRS mobile phone. This chip combines a DSP sub-chip (LEAD2 CPU) with its program and data memories, a Micro- -Controller core with emulation facilities (ARM7TDMIE), internal 8Kb of Boot ROM memory, 4M bit SRAM memory, a clock squarer cell, several compiled single-port or 2-ports RAM and CMOS gates. The chip will fully support the Full-Rate, Enhanced Full-Rate and Half-Rate speech coding. CALYPSO implements all features for the structural test of the logic (full-SCAN, BIST, PMT, JTAG boundary-SCAN).

3.4.2. Block Description

CALYPSO architecture is based on two processor cores ARM7 and DSP using the generic RHEA bus sta ndard as interface with their associated application peripherals.
CALYPSO is composed from the following blocks:

- ARM7TDMIE : ARM7TDMI CPU core
- DSP sub chip
- ARM peripherals

General purpose peripherals

- ARM Memory Interface for external RAM, Flash or ROM
- 4 Mbit Static RAM with write-buffer

Application peripherals

- ARM General purposes I/O with keyboard interface and two PWM modulation signals
- UART 16C750 interface (UART_IRDA) with
  →IRDA control capabilities (SIR)
  →Software flow control (UART mode).
- UART 16C750 interface (UART_MODEM) with
  →Hard ware flow protocol (DCD, CTS/RTS)
  →Auto baud function
- SIM Interface.
- TPU(Time Processing Unit) : Processing for GSM time base
- TSP(Time Serial Port) : GSM data interface with RF and ABB

Memory Interface : External/Internal Memory Interface

nCS0 : FLASH1, 16bit access, 3 wait state

nCS1 : FLAHS2, 16bit access, 3 wait state

nCS2 : Ext SRAM, 16bit access, 3 wait state

nCS3 : Main LCD(16bit access), OEL(8bit access) addressing, 3 wait state

nCS4 : MIDI(8bit access), USB(8bit access) addressing, 3 wait state

nCS6 : Int SRAM, 32bit access, 0 wait state

- Calypso is internaly 39MHz machine (25ns machine cycle), so it requires 3 wait-state for 80ns access(25*4 = 100 ns).

3.4.3. RF Interface (TPU, TSP Block)

Calypso uses this interface to control IOTA_CS(ABB Processor) and AERO(RF Processor) with GSM Time Base

TSP (Time Serial Port)		
Resource	Interconnection	Description
TSPDO	ABB & RF main Chip	Control Data
TSPDI/IO(4)	GPIO4	
TSPEN0	ABB	ABB Control Data Enable Signal
TSPEN1	STROBE	STROBE Control Data Enable Signal
TSPCLKX	CLK	CLK Control Data Enable Signal
TPU (Parallel Port)		
TSPACT0	PDNB	RF main Chip Reset Signal
TSPACT01	PA_ON	Power Amp ON signal
TSPACT02	PA_BAND	Power Amp band-selection signal
TSPACT03	ANT_SW1	FEM control signal
TSPACT04	ANT_SW2	FEM control signal

Table 3-4. RF Interface Spec.

3.4.4. SIM Interface

SIM interface scheme is shown in (Figure 8).
SIM_IO, SIM_CLK, SIM_RST ports are used to communicate DBB with ABB and the Charge Pump in ABB enables 1.8V/3V SIM operation.

SIM Interface

SIM_CLK	**SIM card reference clock**
SIM_RST	**SIM card async/sync reset**
SIM_IO	**SIM card bidirectional data line**
SIM_PWCTRL	**SIM card power activation**
SIM_CD	**SIM card presence detection**

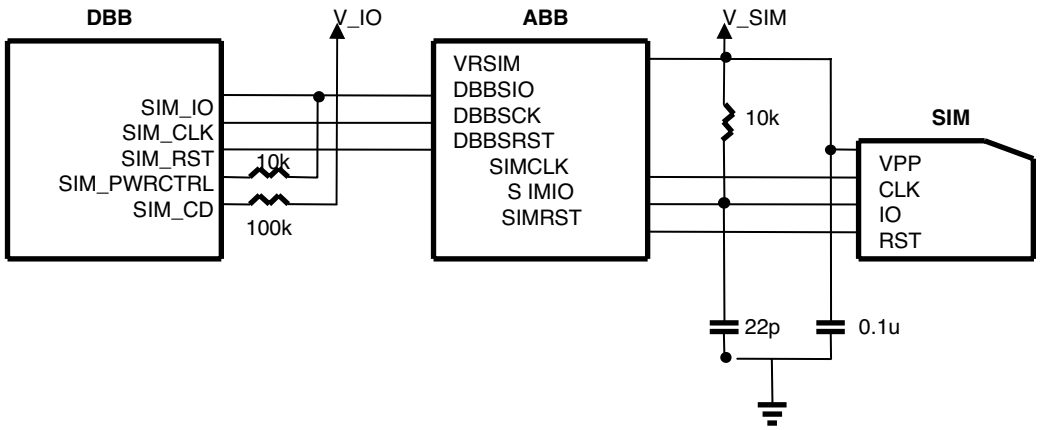

Figure 8. SIM Interface

3.4.5. UART Interface

MG180c has two UART Drivers as follow :

UART : Hardware Flow Control / Fax & Data Modem

UART MODEM (UART1)		
Resource	Name	Description
TX_MODEM	TXD	Transmit Data
RX_MODEM	RXD	Receive Data
CTS_MODEM	CTS	Clear To Send
RTS_MODEM	RTS	Request To Send
GPIO 3	DSR	Data Set Ready

Table 3-5. UART Interface spec.

3.4.6. GPIO Map

In total 16 allowable resources, MG180c is using 13 resources except 3 resources dedicated to SIM and Memory. MG180c GPIO (General Purpose Input/Output) Map, describing application, I/O state, and enable level, is shown in below table.

I/O #	Net Name	I/O	Resource State	Inactive State	Active State
I/O (0)	IF_MODE	O	GPIO	LOW (8080 mode)	HIGH (6400 mode)
I/O (1)	MELODY_INT	I	GPIO	HIGH	LOW
I/O (2)	LCD_ID	I	GPIO	LOW (?)	HIGH (?)
I/O (3)	DSR (Note 1)	I	GPIO	HIGH	LOW
I/O (4)	LCD_BACKLIGHT (Note 2)	O	GPIO	LOW	HIGH
I/O (5)	SIM_PWCTL	O	SIM		
I/O (6)	VOICEMAIL_EN	O	GPIO	LOW	HIGH
I/O (7)	LCD_RESET	O	GPIO	HIGH (Normal Operation)	LOW (Reset)
I/O (8)	NOT USE	O	GPIO		
I/O (9)	PCM_TX / Not used	O	DAI / GPIO	(Note 2)	(Note 2)
I/O (10)	PCM_RX	O	DAI /GPIO	(Note 2)	(Note 2)
I/O (11)	PCM_CLK / Not used	O	DAI / GPIO	(Note 2)	(Note 2)
I/O (12)	PCM_SYNC / Not used	O	DAI / GPIO	(Note 2)	(Note 2)
I/O (13)	NOT USE	O	GPIO		
I/O (14)	NBHE	O	MEMORY		
I/O (15)	NBLE	O	MEMORY		

Table 3-6. GPIO Map Table

3.5 Analog Baseband (ABB) Processor

3.5.1. General Description

IOTA is Analog Baseband (ABB) Chip supports GSM900,DCS1800, PCS1900, GPRS Class 10 with Digital Basband Chip (Calypso). IOTA processes GSM modulation/demodulation and power management operations.

Block Description

- Audio Signal Processing & Interface
- Baseband in-phase(I), quadrature(Q) Signal Processing
- Auxiliary RF converters
- Five-channel analog-to-digital converters (ADC)

- Six Low-dropout (LDO), linear voltage regulators targeted core, general I/O, memory I/O, SIM I/O
- High voltage (20V) Li-Ion or Ni-MH battery charging control
- Voltage detectors (with power-off delay)
- Voice Codec

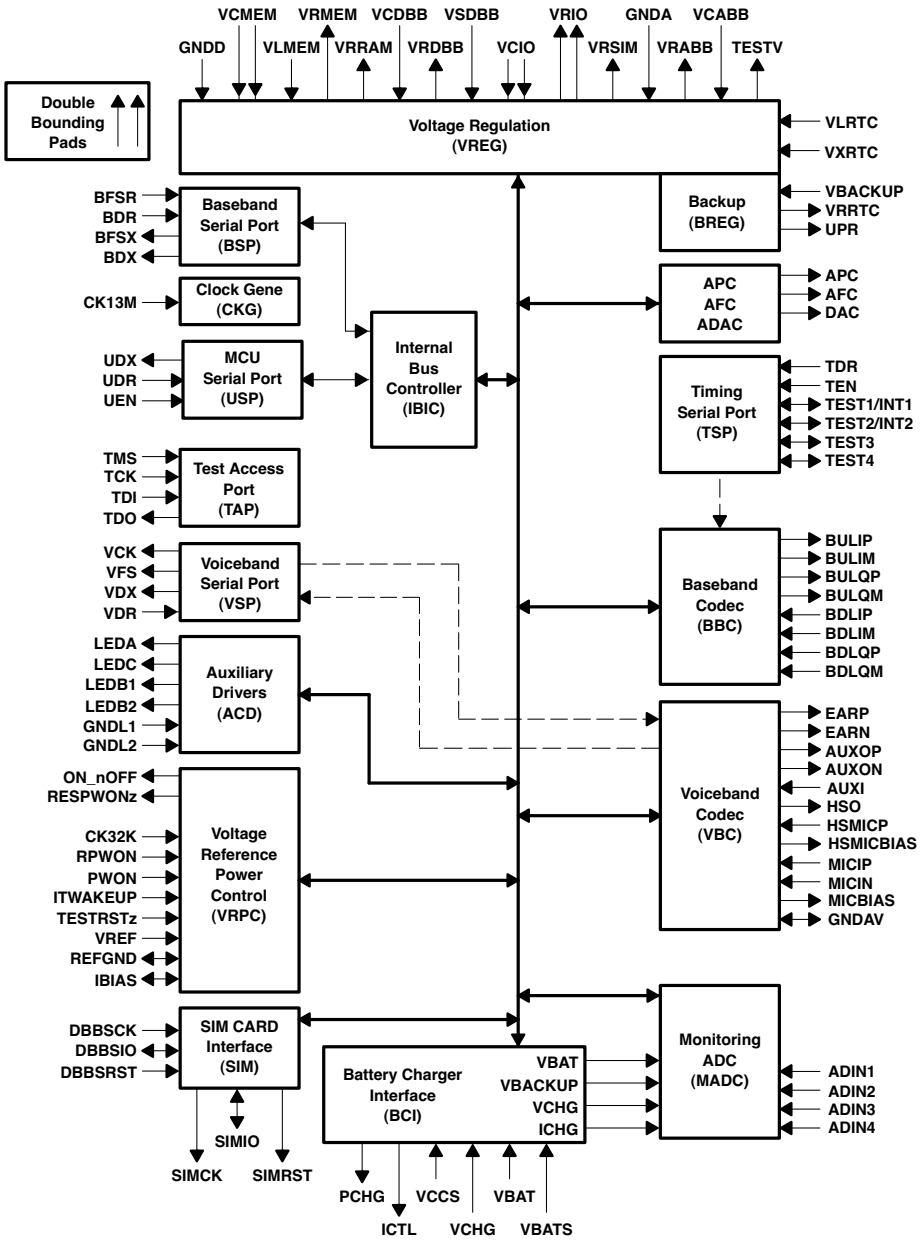

Figure 9. Top level block diagram of the IOTA(TWL3025)

3.5.2. Audio Signal Processing & Interface

The voice codec circuitry processes analog audio components in the voice uplink (VUL) path and applies this signal to the voice signal interface for eventual baseband modulation. In the voice downlink (VDL) path, the codec circuitry changes voice component data received from the voice serial interface (VSP) into analog audio.

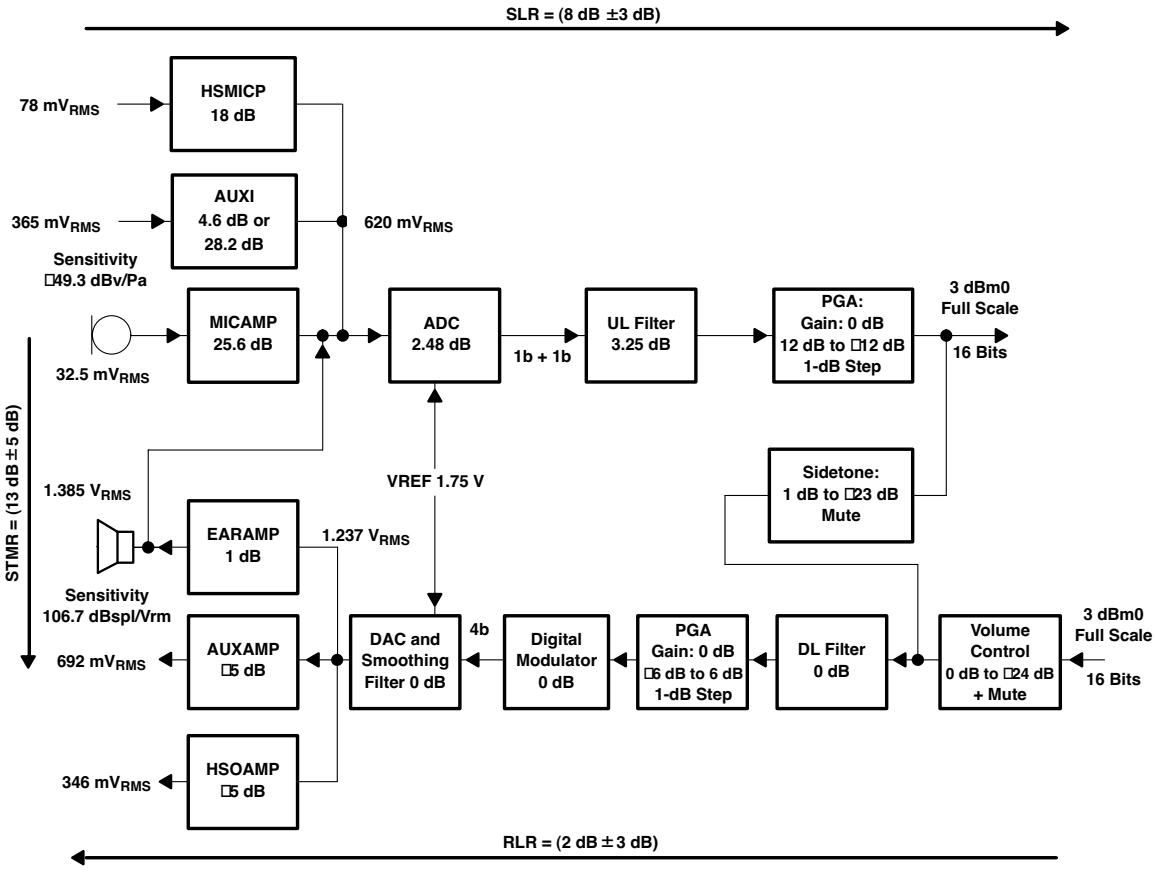

Figure 10. Audio Interface Block Diagram

3.5.3. Audio uplink processing

The VUL path includes two input stages. The first stage is a microphone amplifier, compatible with electret microphones containing a FET buffer with open drain output. The microphone amplifier has again of typically 25.6 dB (1 dB) and provides an external voltage of 2.0 V or 2.5 V to bias the microphone (MICBIAS). The auxiliary audio input can be used as an alternative source for higher level speech signals. This stage performs single-ended-to differential conversion and provides a programmable gain of 4.6 dB or 28.2 dB. The third stage is a headset microphone amplifier, compatible with electret microphones. The headset microphone amplifier has a gain of typically 18 dB and provides an external voltage of 2.0 V or 2.5 V to bias the headset microphone (HSMICBIAS).

When one of the input stages (MICI, AUXI, HSMICP) is in use, the two other input stages are disabled and powered down. The resulting fully differential signal is fed to the analog-to-digital converter (ADC). The ADC conversion slope depends on the value of the internal voltage reference. Analog-to-digital conversion is performed by a third-order !-" modulator with a sampling rate of 1 MHz. Output of the ADC is fed to a speech digital filter, which performs the decimation down to 8 kHz and band-limits the signal with both low-pass and high-pass transfer functions. Programmable gain can be set digitally from -12 dB to +12 dB in 1-dB steps and is programmed with bits 4-0 (VULPG(4:0)) of the voiceband uplink register. The speech samples are then transmitted to the DSP via the VSP at a rate of 8 kHz. There are 15 meaningful output bits. Programmable functions of the VUL path, power-up, input selection, and gain are controlled by the BSP or the USP via the serial interfaces. The VUL path can be powered down by bit 0 (VULON) of the power down register.

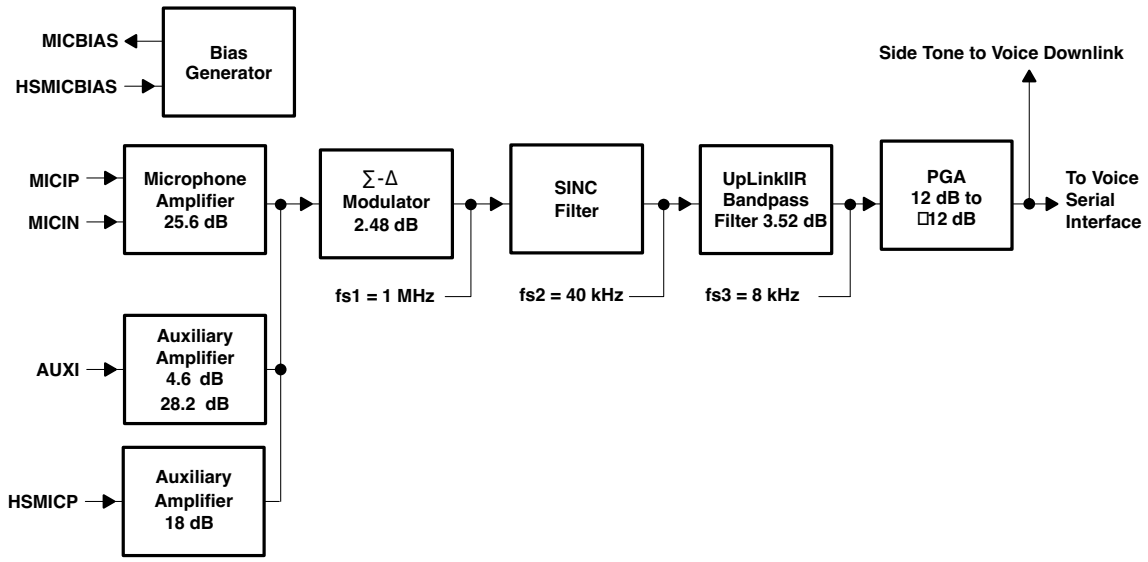

Figure 11. Uplink Path

3.5.4. Audio downlink processing

The VDL path receives speech samples at the rate of 8 kHz from the DSP via the VSP and converts them to analog signals to drive the external speech transducer. The digital speech coming from the DSP is first fed to a speech digital filter that has two functions. The first function is to interpolate the input signal and to increase the sampling rate from 8 kHz up to 40 kHz to allow the digital-to-analog conversion to be performed by an oversampling digital modulator. The second function is to band-limit the speech signal with both low-pass and high-pass transfer functions. The filter, the PGA gain, and the volume gain can be bypassed by programming bit 9 (VFBYP) in the voiceband control register 1.

The interpolated and band-limited signal is fed to a second order !-" digital modulator sampled at 1 MHz to generate a 4-bit (9 levels) oversampled signal. This signal is then passed through a dynamic element matching block and then to a 4-bit digital-to-analog converter (DAC). The volume control and the programmable gain are performed in the voiceband digital filter. Volume control is performed in steps of 6 dB from 0 dB to -24 dB. In mute state, attenuation is higher than 40 dB. A fine adjustment of gain is possible from -6 dB to +6 dB in 1-dB steps to calibrate the system depending on the earphone characteristics. This configuration is programmed with the voiceband downlink control register.

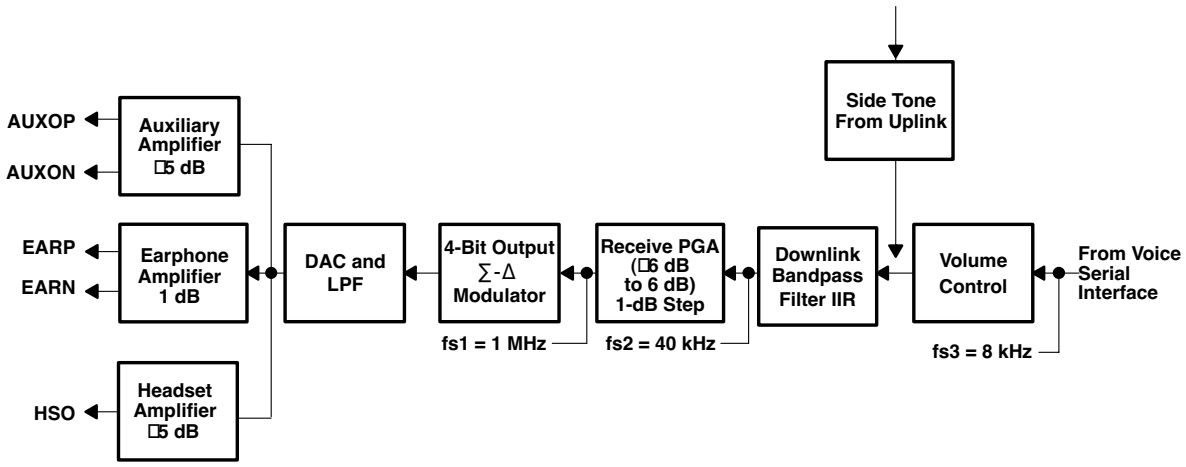

Figure 12. Downlink Path

3.5.5. Baseband Codec (BBC)

Baseband codec is composed of baseband uplink path (BUL) and baseband downlink path (BDL). BUL makes GMSK (Gaussian Minimum Shift Keying) modulated signal which has In-phase (I) component and quadrature (Q) component with burst data from DBB. This modulated signal is transmitted through RF section via air. BDL process is opposite procedure of BUL. Namely, it performs GMSK demodulation with input analog I&Q signal from RF section, and then transmit it to DSP of DBB chip with 270.833kHz data rate through BSP.

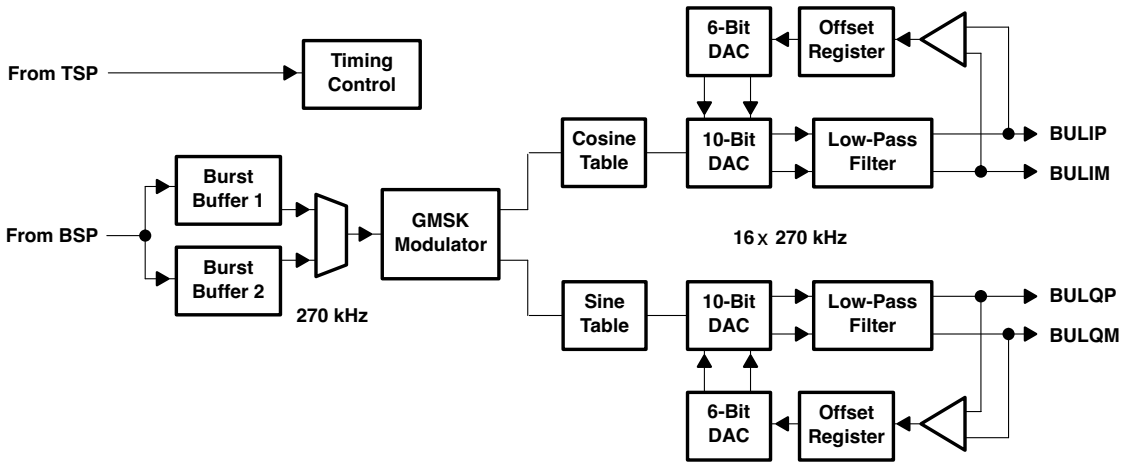

Figure 13. Baseband Codec Block Diagram

3.5.6. Voltage Regulation (VREG)

There are 7 LDO (Low Drop Output) regulators in ABB chip. The output of these 7 LDOs are as following table. (Figure14) shows the power supply related blocks of DBB/ABB and their interfaces in MG180c.

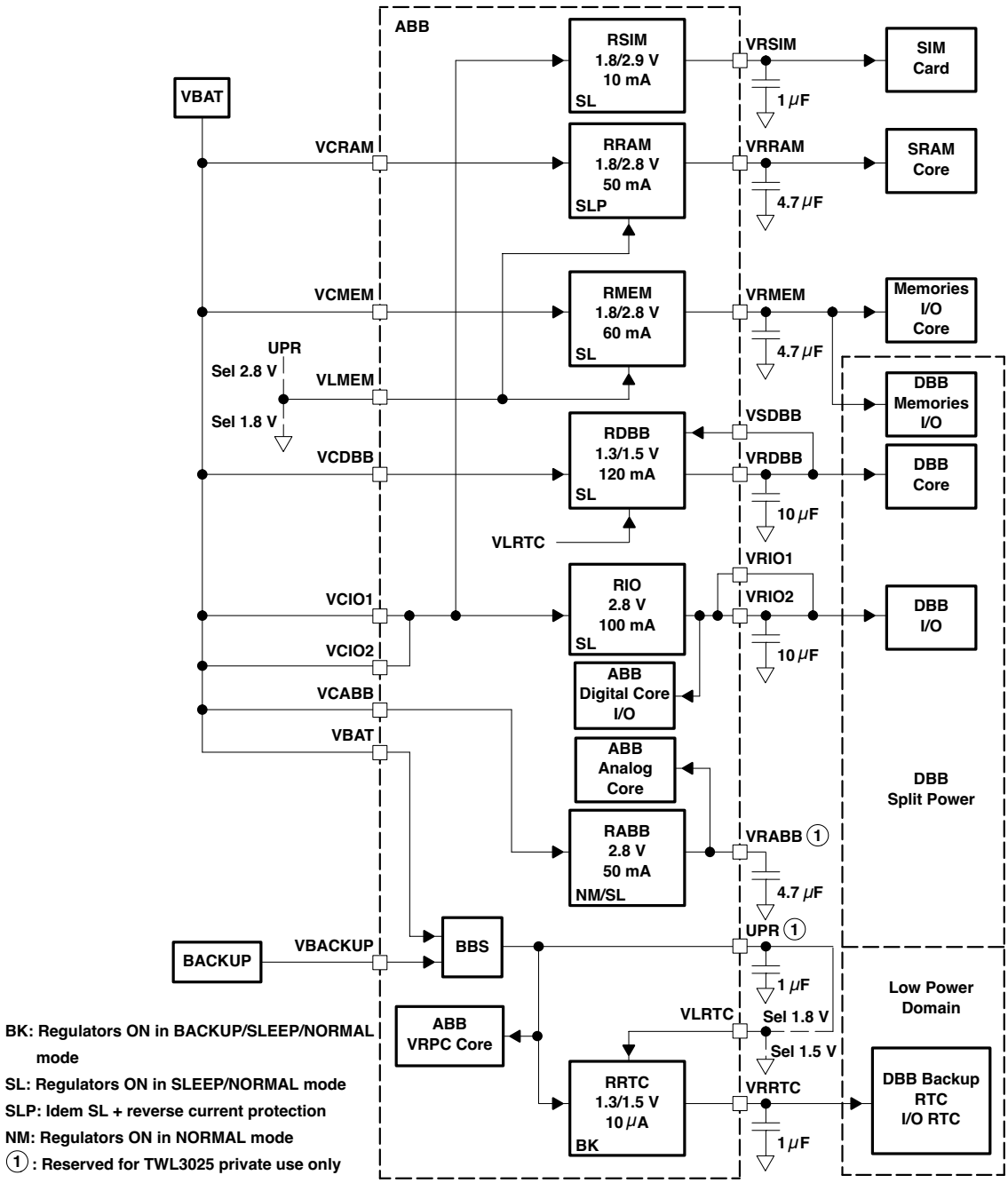

Figure 14. Power Supply Scheme

	Output Voltage	Usage
VRDBB	1.5V	Digital Core of DBB
VRIO	2.8V	Peripheral devices
VRMEM	2.8V	External memory
VRRAM	2.8V	LCD & peripheral devices
VRABB	2.8V	Analog Block of ABB
VRSIM	2.85V	SIM card driver
VRRTC	1.5V	RTC & 32kHz-crystal

Table 3-7. LDO Output Table

3.5.7. ADC Channels

ABB ADC block is composed of 4 internal ADC (Analog to Digital Converter) channels and 4 external ADC channel. This block operates charging process and other related process by reading battery voltage and other analog values.

ADC 8 Channels		
Resource	Name	Description
VCHG	VCHG	Charging Management
VBAT	VBAT	
ICHG	ICHG	
VBACKUP	VBACKUP	Backup Battery
ADCIN1	ADIC1	PCB_Revision
ADCIN2	BATT_TEMP	Battery Detect
ADCIN3	TEMPSENSE	Temperature Sensing
ADCIN4	HOOK_DETECT	HOOK_DETECT

Table 3-8. ADC Channel Spec.

3.5.8. Charging

Charging block in ABB processes charging operation by using VBAT, ICHG value through ADC channel. Battery Block Indication and SPEC of MG180c is as follow.

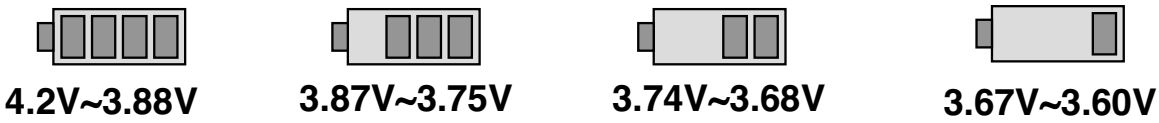

Figure 15. Battery Block Indication

1. Charging method: CC-CV
2. Charger detect voltage: about 5.2V
3. Charging time: 2h 30 min under
4. Icon stop current: 120mA
5. Charging current: 550mA
6. CV voltage: 4.2V
7. Cutoff current: 30mA
8. Full charge indication current (icon stop current) : 100mA
9. Recharge voltage: 4.16V
10. Low battery alarm
    a. Idle: 3.55V
    b. Dedicated: 3.59V
11. Low battery alarm interval :
    a. Idle: 2min
    b. Dedicated:1min
12. Power-off voltage without TA : 3.35V
    Power-off voltage with TA : 2.80V
13. Charging temperature ADC range
    a. ~ -5°C : small charging operation.
    b. -5°C ~ 50°C : charging.
    c. 50°C ~ : small charging operation.

3.5.9. Switch On/Off

MG180c Power State : Defined 4cases as follow

→ Power-ON : mobile is powered by main battery or backup battery.

→ Power-OFF : mobile isn't any battery.

→ Switch-ON : mobile is powered and waken up from switch-off state.

→ Switch-OFF : mobile is powered to maintain only the permanent function (ULPD).

To enter into Switch-ON state, one of following 4 condition is satisfied.

→ **PWR-ON :** pushed after a debouncing time of 30ms.

→ **ON_REMOTE :** After debouncing, when a falling edge is detected on RPWON pin.

→ **IT_WAKE_UP :** When a rising edge is detected on RTC_ALARM pin.

→ **CHARGER_IC :** When a charger voltage is above VBAT+0.4V on VCHG.

3.5.10. Memories

MG180c using 64Mbit Flash + 32Mbit SRAM with 16 bit parallel data bus thru ADD01 ~ ADD22.

3.5.11. Display & FPCB Interface

LCD module include:

→ MAIN LCD: 65,000 Color STN LCD

→ LCD Backlight: White LED illumination

MAIN BOARD AND FPCB is connected by 35pin connector. FPCB have two connectors , both connectors have 35pins. FPCB and MAIN BOARD is connected by 35 pin connector. LCD module is connect by 35pin connector .

Connector Interface Spec.

1.LCD Connector

Pin #	NAME	Description
1	VDD	Power Input(2.8V)
2	VSS	GND
3	RESET/	Reset
4	NC(OTPG)	No connection
5	D0	LCD Data
6	D1	LCD Data
7	D2	LCD Data
8	D3	LCD Data
9	D4	LCD Data
10	D5	LCD Data
11	D6	LCD Data
12	D7	LCD Data
13	VSS	GND
14	LCD_BL_IN	LCD Back Light Input
15	VSS	GND
16	LED_C1	LCD Back Light Output
17	LED_C2	LCD Back Light Output
18	VSS	GND
19	RS	Data/Address Control Input
20	/CS	LCD Chip Select
21	IF_MODE	Data Bus Length Select
22	LWR/	Write Input
23	D8	LCD Data
24	D9	LCD Data
25	D10	LCD Data
26	D11	LCD Data
27	D12	LCD Data
28	D13	LCD Data
29	D14	LCD Data
30	D15	LCD Data
31	VSS	GND
32	RD/	Read Input
33	NC(OTPD)	No connection
34	LCD_ID	LCD Mark ID
35	VSS	GND

Table 3-9. Connector Interface Spec.

Connector Interface Spec.

2. Bottom System Connector

Pin #	WS	Separate
	24Pin	
1	N.C	
2	N.C	
3	DSR	**UART1**
4	POWER(VCHG)	CHARGING (VCHG)
5	POWER(VCHG)	CHARGING (VCHG)
6	POWER ON(RPWON)	TEST (RPWON)
7	PCM_RX/TDI	TEST : DAI/JTAG
8	PCM_CLK/TCK	TEST : DAI/JTAG
9	PCM_SYNC/TMS	TEST : DAI/JTAG
10	RX	UART2 (Receive Data)
11	PCM TX /TDO	TEST : DAI/JTAG
12	POWER GND	GND
13	RXD	**UART1** (Receive Data)
14	TXD	**UART1** (Transmit Data)
15	TX	UART2 (Transmit Data)
16	N.C	
17	N.C	
18	N.C	
19	POWER GND	GND
20	RTS	**UART1** (Ready To Send)
21	POWER(VBAT)	POWER (VBAT)
22	POWER(VBAT)	POWER (VBAT)
23	CTS	**UART1** (Clear To Send)
24	N.C	
25	GND	Battery GND
26	GND	Battery GND
27	BATT_TEMP	Battery Temp
28	VBAT	Battery VBAT

Table 3-9. Connector Interface Spec.

3.5.12. Keypad Switching & Scanning

Table 3-10. Keypad Map

	KBC0	KBC1	KBC2	KBC3	KBC4
KBR0	LEFT	RIGHT	UP	DOWN	OK
KBR1	1	2	3	CAM	CLEAR
KBR2	4	5	6	F1	VOL_UP
KBR3	7	8	9	F2	VOL_DOWN
KBR4	STAR	0	SHAP	SEND	F3

DBB supports 25 Key Map and Switch-ON Key is connected directly to ABB as (Figure16).

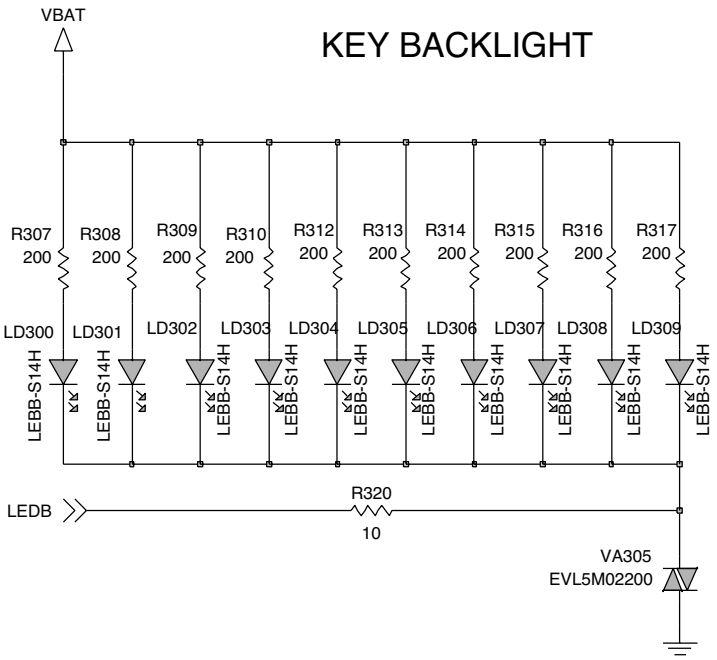

Figure 16. Keypad Scanning Scheme

3.5.13. Keypad back-light Illumination

There are 6 Deep Blue LEDs in Main Board for Keypad Backlight and 6 Deep Blue LEDs in Upper Board for Upper Board Backlight. Keypad Back-light is driven by 'LEDB' line from IOTA .

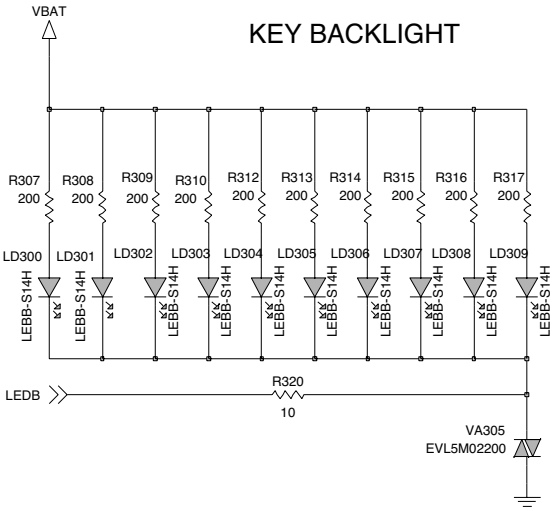

Figure 17. Keypad Back-light Scheme

3.5.14. LCD Illumination

There are 2 LEDs in the LCD module for LCD backlighting. MLED and SLED is connected driver ic of LCD module.

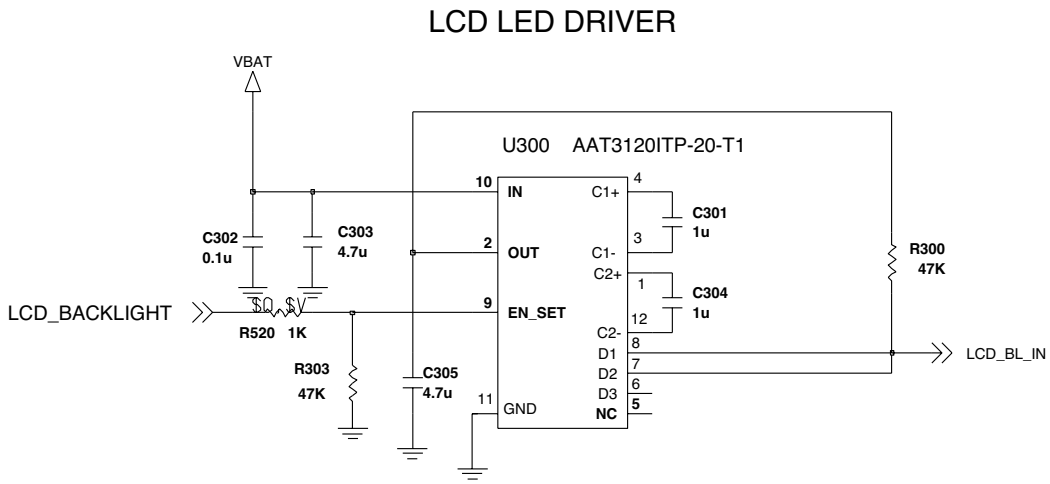

Figure 18. LCD Back-light Scheme

3.5.15. Audio Circuit

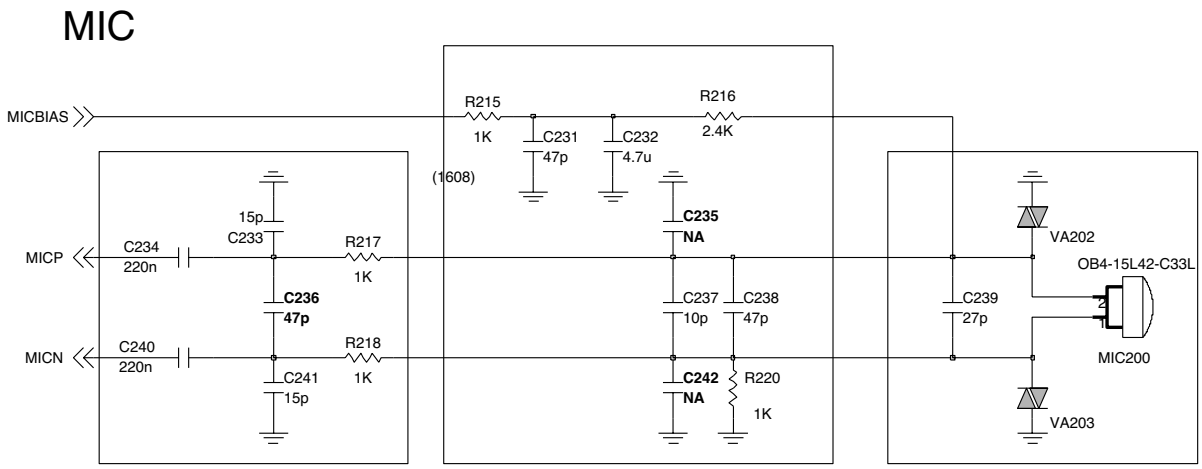

Figure 19. Microphone system

Microphone circuits

When a call is established, MICBIAS signal goes up to '2.5V' in the MG180c. IOTA(ABB) provides bot h 2.0V and 2.5V for MICBIAS to circuit designer. VA202, VA203 are employed to enhance ESD immunity.

Head set Jack Interface

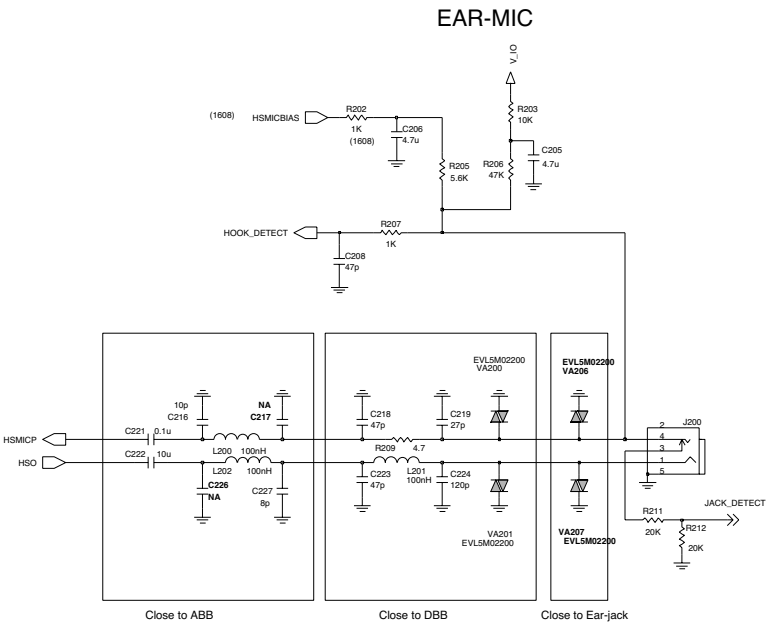

Figure 20. Ear-Jack interface

When ear-mic set or head set plug is inserted into the receptacle, JACK_DETECT signal which is input o f ADIN1 in ABB changes from ‘H’ to ‘L’. If hook button is pushed for a second to make a call, then HOOK _DETECT signal which is input of ADIN4 in ABB goes from ‘H’ to ‘L’. Also call end has same mechanism by pushing hook button on the Ear- microphone strap.
Ordinarily detection of pushing hook button is established by signal de-bouncing for about 20ms.

MIDI SOUND circuit description

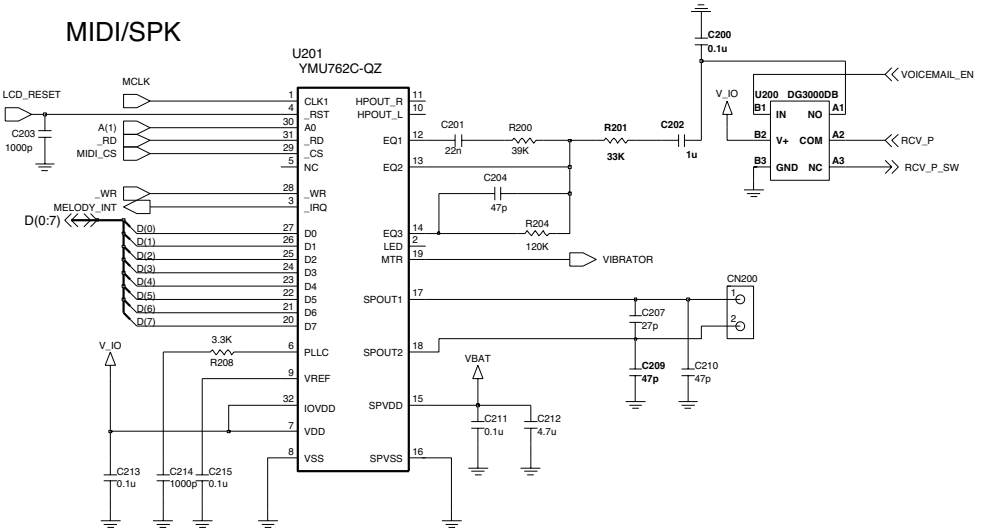

Figure 21. MIDI sound Circuit

The YMU762 has features as described below.

- Simultaneous generation of up to 40 tones: FM+Wavefrm table stereophonic hybrid synthesizer
- Polyphonic synthesizer specification
- Has built-in default tones for FM and Waveform table synthesizers in the ROM, and the tone can be downloaded ot RAM.
- Fundamedtal waveforms for FM and algorithm are improved, and tome paramedters are added.
- Software replay with ADPCM/PCM (shared use of Waveform table section)
- Software interrupt mechanism for external synchronization
- Equipped with 8 bit parallel I/F for control from CPU
- Ezuipped with speaker amplifier and equalizer circuit
- Has built-in PLL to support inputting of master clock up to 20 NHz.
- Contains a 16-bit stereophonic D/A converter.
- Equipped with a stereophonic output terminal for headphone
- Supports power down mode.
- Digital power supply: 2.7V to 3.3V (Typ 3.0V)
- Analog power supply: 2.7V to 4.5V (Typ 3.6V)
- 32-pin QFN plastic package

Receiver and Speaker circuit

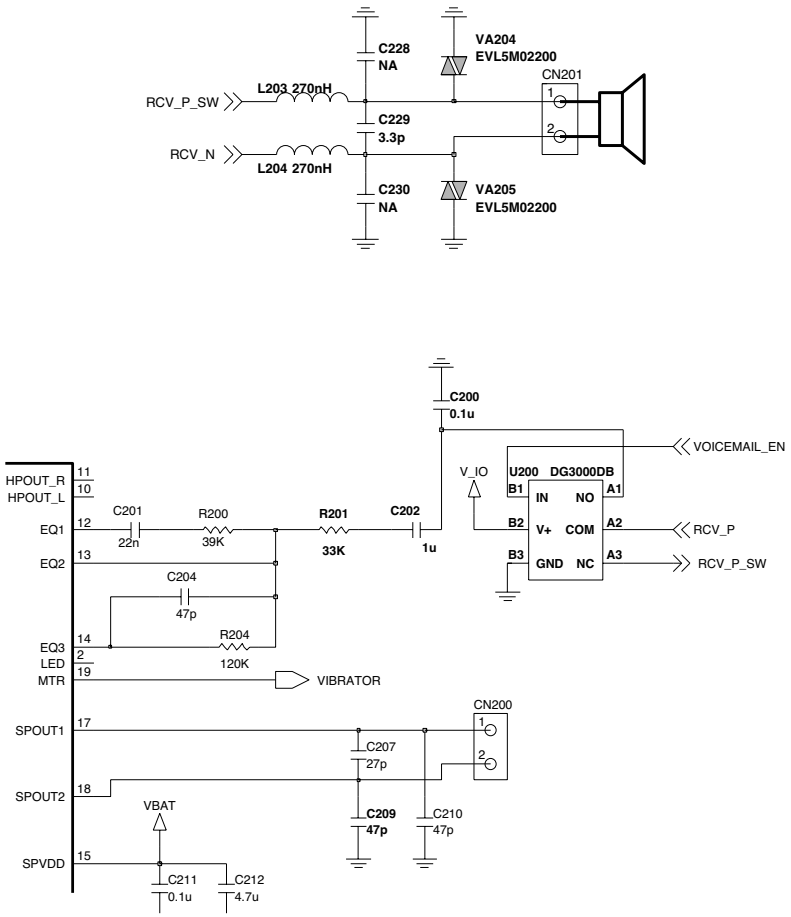

Figure 22. Receiver and Speaker Circuit

A single analog switch is employed to support both voice and speaker shone mode with RCV_P. In the speaker phone mode the VOICEMAIL_EN port sets ‘H’ , then the RCV_P will be connected with MIDI sound path(NO) and operate as loud speaker. The other case, the VOICEMAIL_EN port will remain ‘L’ state and RCV_P will be connected with receiver path EAR_P(NC)

4. TROUBLE SHOOTING

4.1 Main Components Placement

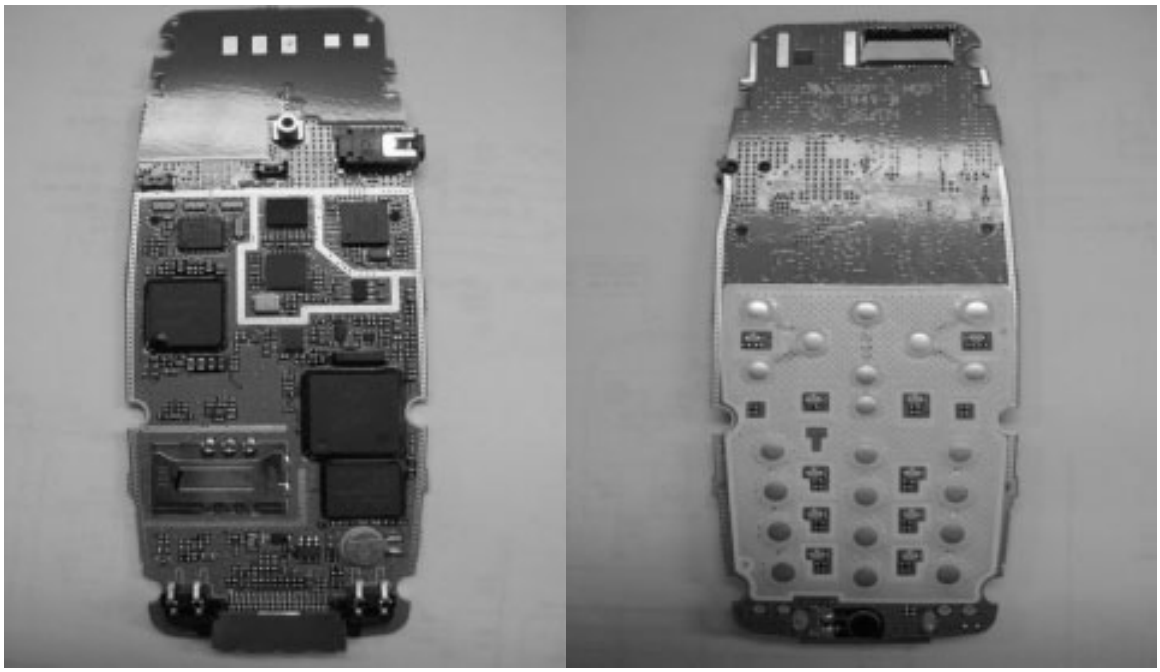

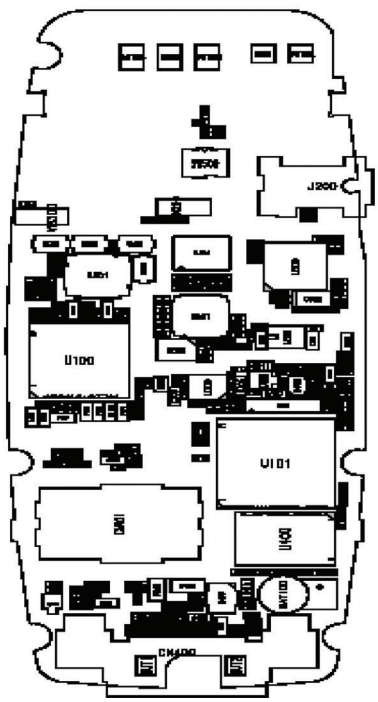

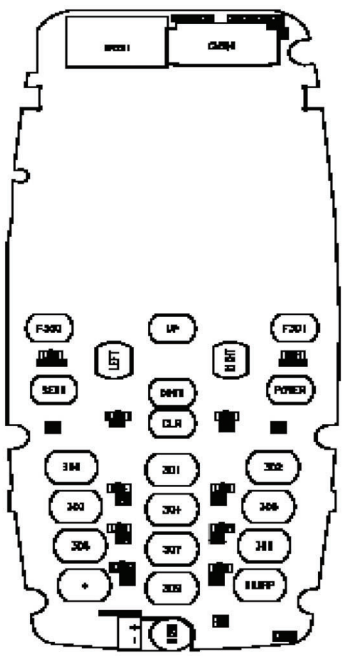

4.2 FPCB Components Placement

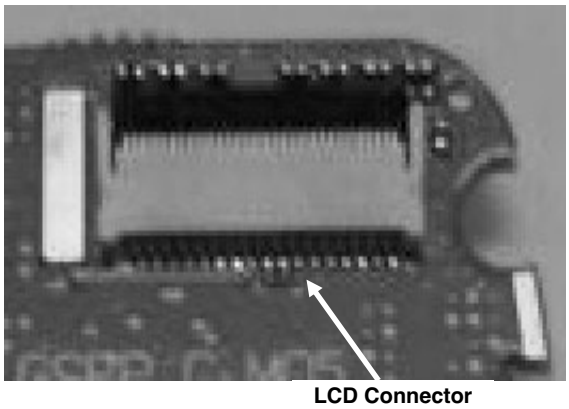

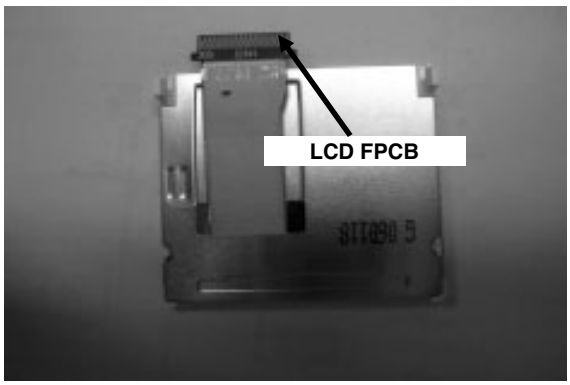

4.3 Baseband Components

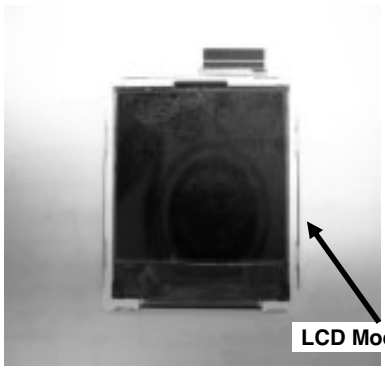

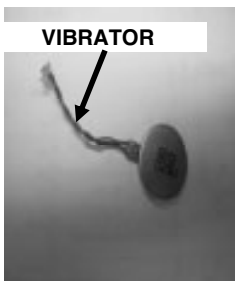

4.4 Main Components (Description)

MAIN

SPK	Speaker/Receiver	**CN1**	LCD 35pin connect
VIB	Vibrator	**BAT**	Backup Battery
U400	Memory(Flash 64Mbit/SRAM 32Mbit	**MIC200**	Microphone
CN300	LCD connector	**CN400**	IO connector
U300	LCD Back Light LED charge pump	**U501**	RF Tranceiver
SW500	RF Mobile switch	**U500**	Power Amplifier Module
FL500	Quad FEM	**U100**	Analog Base Band (IOTA)
CN300	SIM Connector	**X100**	XTAL 32.768KHz
X500	XTAL 26MHz	**U101**	Digital Base Band(Calypso-)
U201	MIDI chip(40poly)	**U200**	DUAL SPDT ANALOG SWITCHES

4.5 Power On Trouble

4.5.1 Power On Sequence

Connecting Battery

- Power-On Key Detection
- PWON signal goes to ABB and then ABB reset DBB by ON_OFF signal
- ON_OFF turn low(1.5V) to HIGH(2.8V) and it resets Calypso

4.5.2 Check Points

- Battery Voltage
- Power-On Key Detection (PWON signal)
- Outputs of LDOs

4.5.3 Trouble Shooting Setup

- Connect PIF-UNION to the phone
- Set the TI-remote switch PIF-UNION off

4.6 Charging Trouble

- Charging method : CC-CV
- Charger detect voltage : about 5.2V
- Charging time : 2h 30 min under
- Charging current : 550mA
- Cutoff current : 120mA
- Low battery alarm
  - Idle : 3.55V
  - Dedicated : 3.59V
- Switch-off voltage : 3.35V
- Charging temperature ADC range
  - ~ -20°C : small charging operation.
  - -20°C ~ 60°C : charging.
  - 60°C ~ : not charging operation small charging operation.

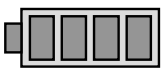

4.2V~3.88V

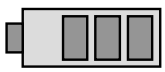

3.87V~3.75V

3.74V~3.68V

3.67V~3.60V

Block Diagram

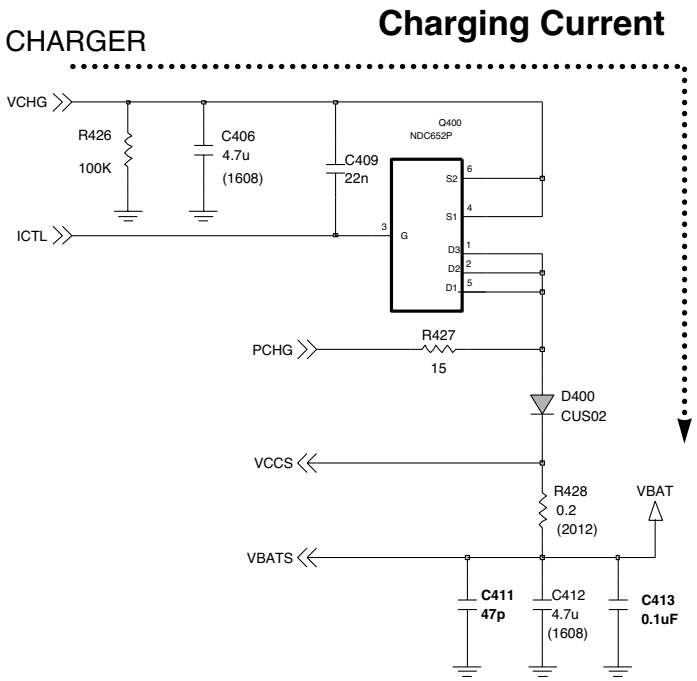

4. TROUBLE SHOOTING

Charging Procedure

- Connecting TA & Charger Detection
- Control the charging Current by ABB
- Charging Current flows into the Battery

Check Points

- Connection of TA
- Charging Current Path
- Battery

Trouble Shooting Setup

- Connect Battery & TA to the handset.

Trouble Shooting Procedure

- Check the charger connector.
- Check the charging current path.
- Check the battery

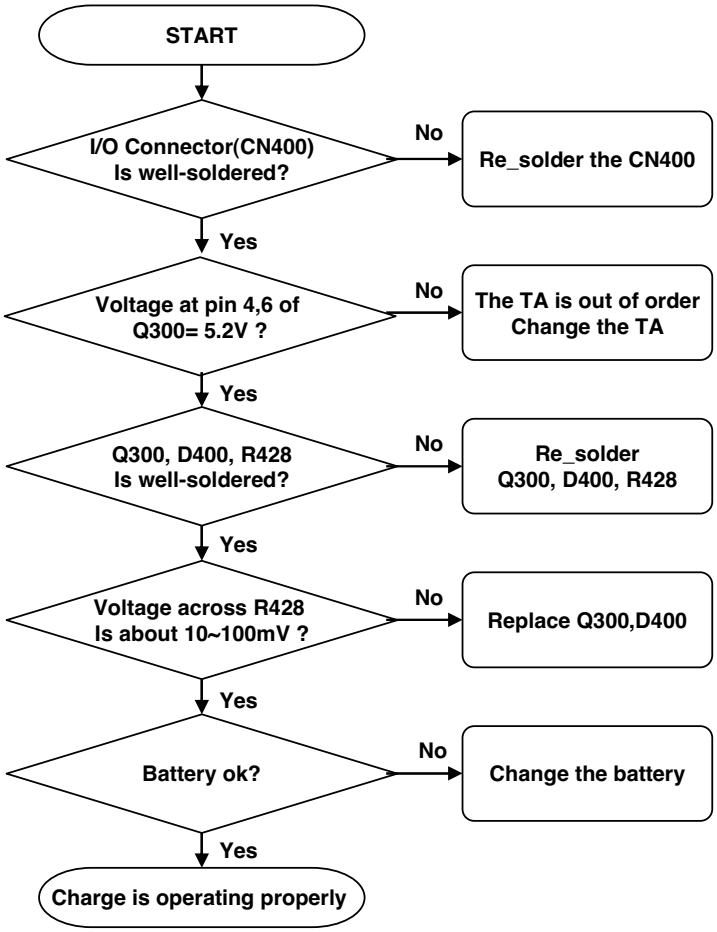

4.7 LCD Display Trouble

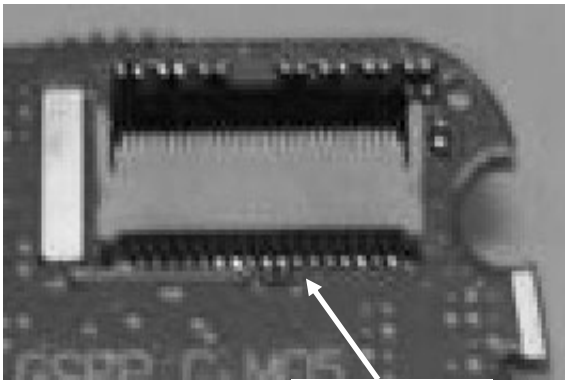

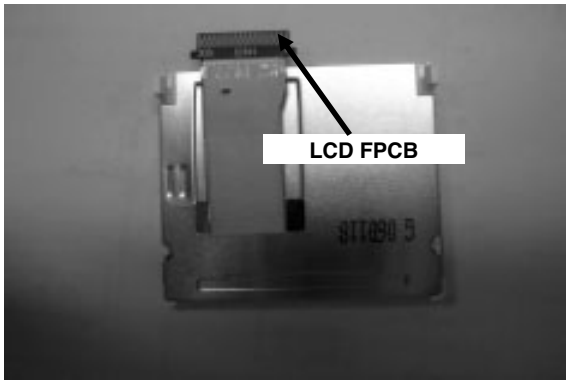

Check connector

LCD Control Signals From Main Board

- MLED , L_MAIN_CS, L_SUB_CS ,LCD_RESET, L_WR, LCD_ID
- L_A(1), L_D(0)~L_D(15), IFMODE

Check Points

- The Assembly status of the LCD Module.
- The Soldering of connectors
- The FPCB which connects the LCD module with the main board.
- BackEND IC Soldering

Trouble Shooting Setup

- Connect PIF, and power on

4. TROUBLE SHOOTING

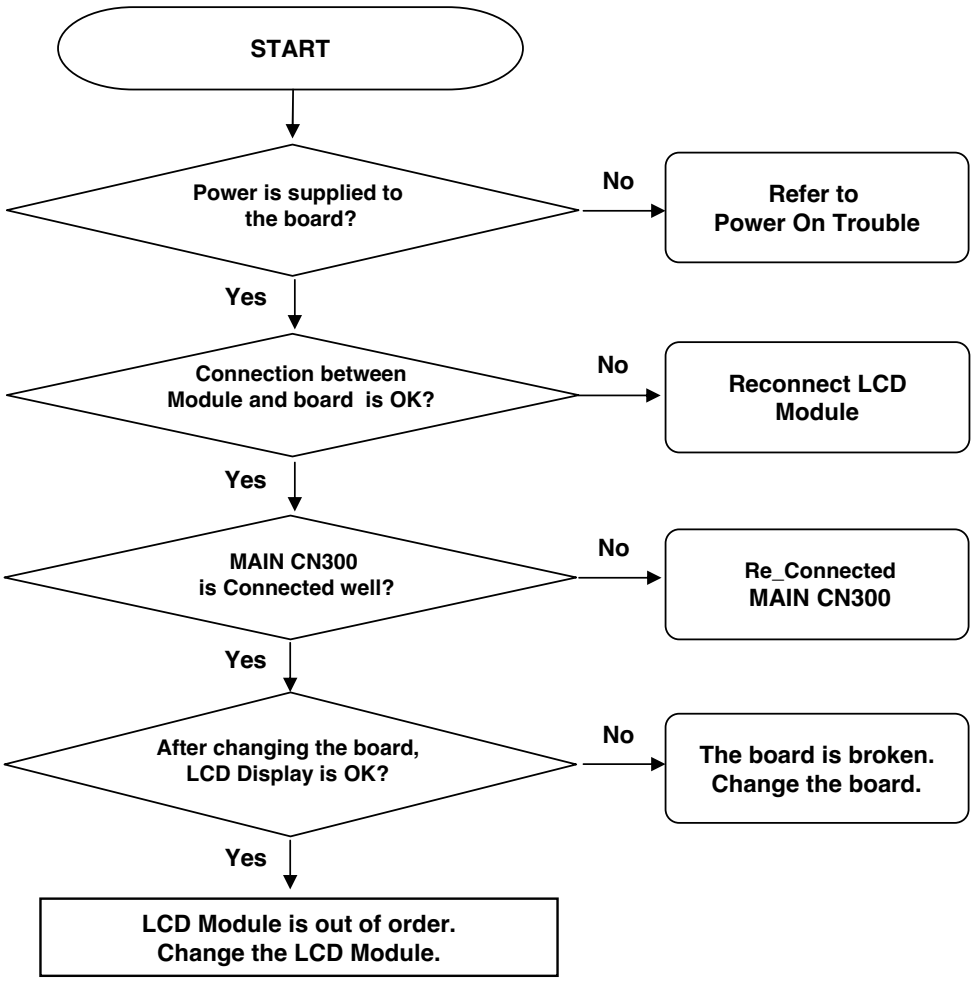

4.8 Receiver Trouble

Block Diagram

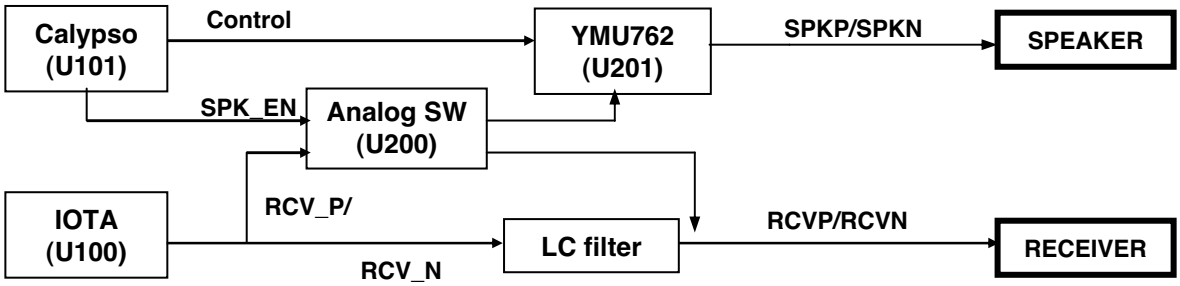

Melody Generation

- U201(YMU762,MIDI) is controlled by DBB.
- U201 generates 40poly MIDI sound and it is delivered to the speaker

Signals to the receiver

- EAR_N, EAR_P From ABB
- EAR_N, EAR_P are delivered to Receiver

Check Points

- Audio signals from ABB
- Audio signals to the receiver
- Audio signal path
- Check the sound level to the speaker.
- Soldering of connectors, speaker and receiver
- Speaker
- Receiver

4. TROUBLE SHOOTING

Speaker Part

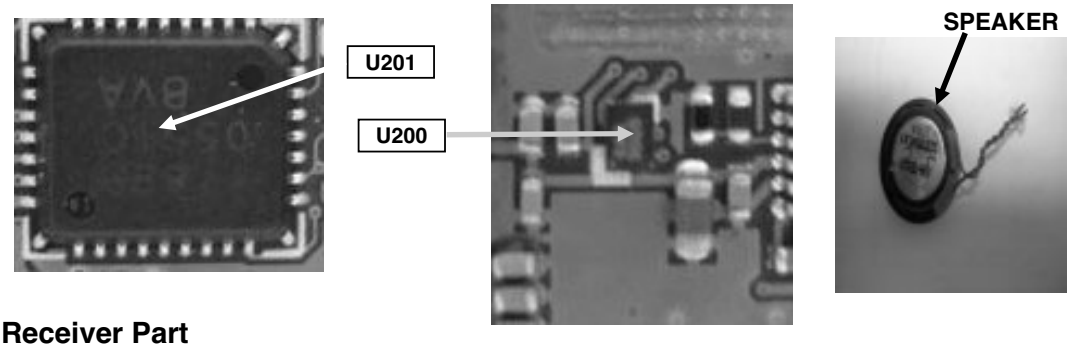

Receiver Part

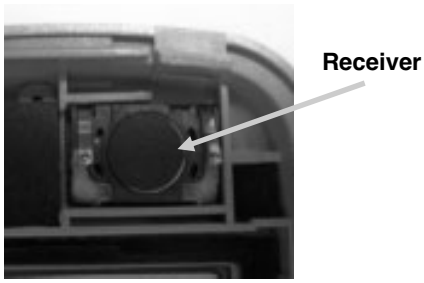

Receiver Trouble Shooting Setup

- Initialize GSM MS test equipment.
- Connect PIF-UNION and power on.
- Make a test call to 112.
- Set audio part at test equipment as PRBS or continuous wave, not echo.
- Set the audio volume max.

Trouble shooting Procedure

- Check the audio signal levels at each point.
- Check the soldering of the connector.
- Check the soldering of the receiver.
- Check the receiver.
- Check receiver cable states.

Speaker Trouble Shooting Setup

- Connect PIF to the phone, and power on.
- Enter the engineering mode, and go to menu. “Baseband → Alert → Ring”

Trouble Shooting Procedure

- Check the voltage levels of power supplies.
- Check all sound path.
- Check the sound level to the speaker.
- Check the speaker and the soldering.

4.8.1. Receiver Trouble

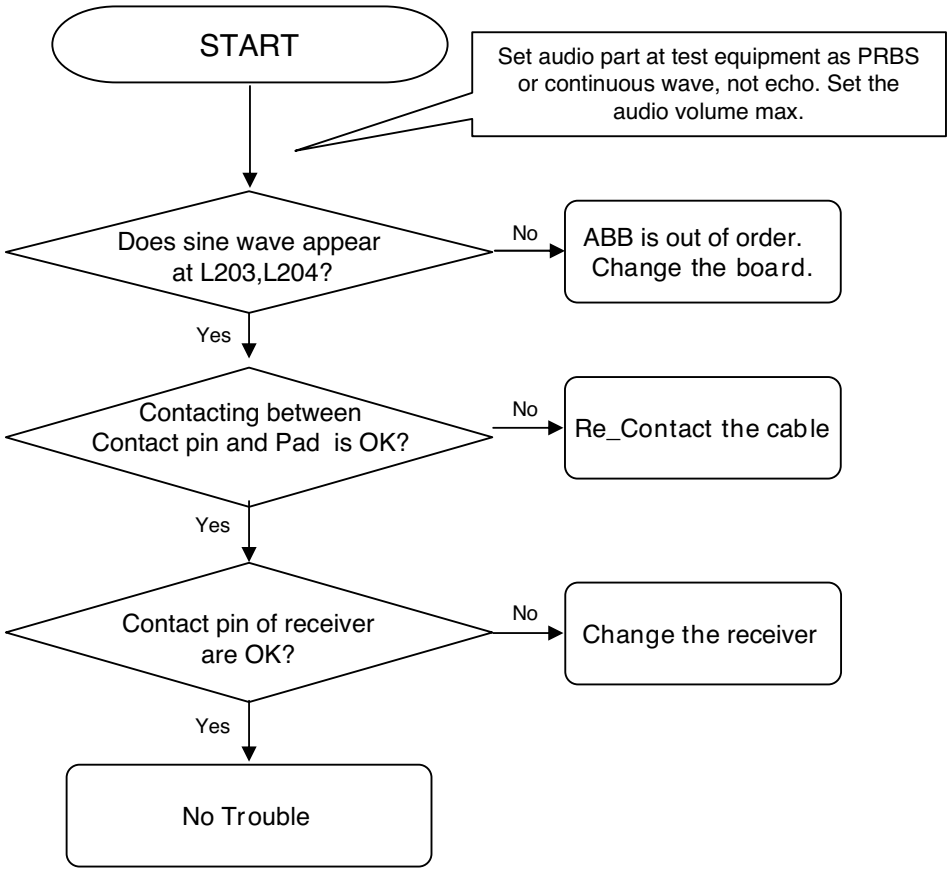

4.8.2. Speaker(MIDI) Trouble

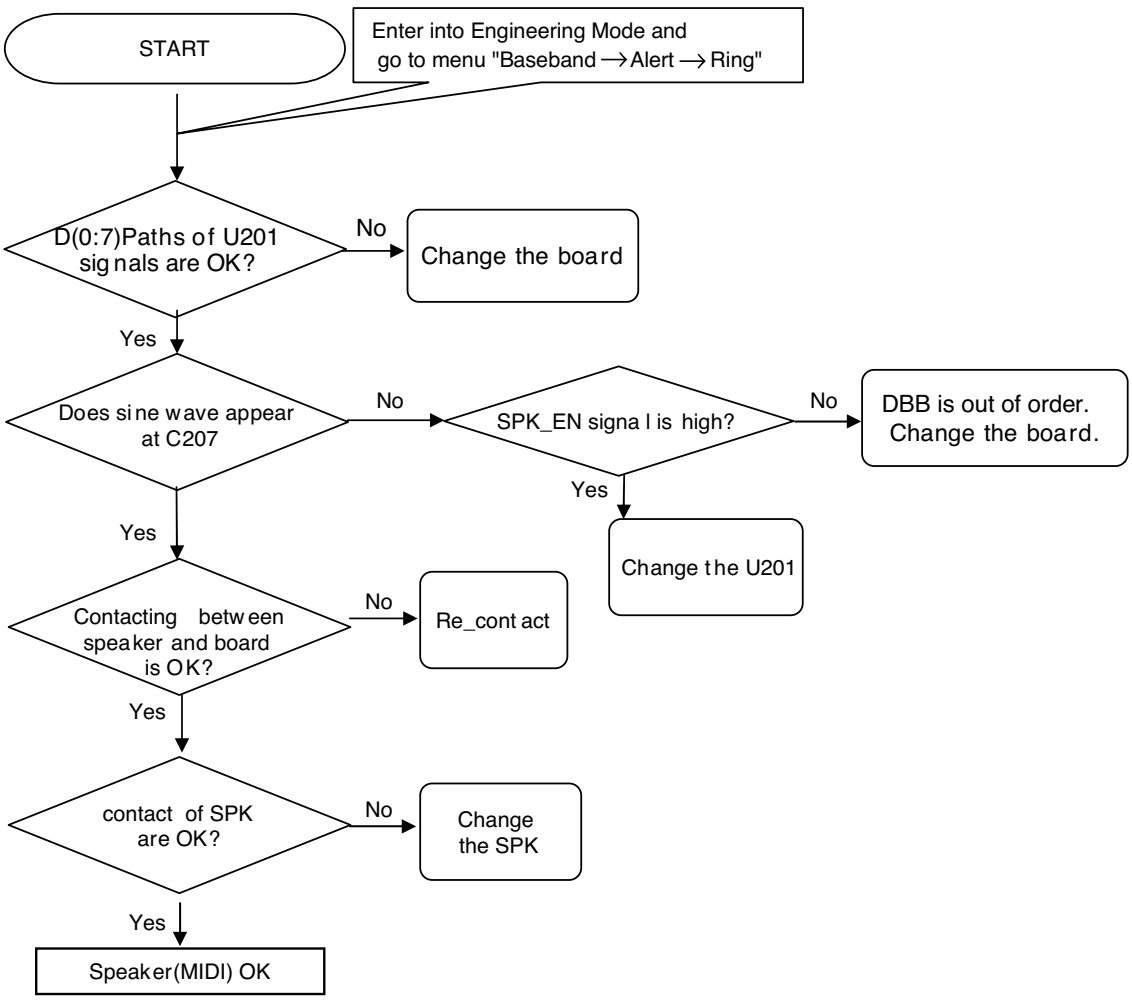

4.9 Microphone Trouble

Circuit Diagram

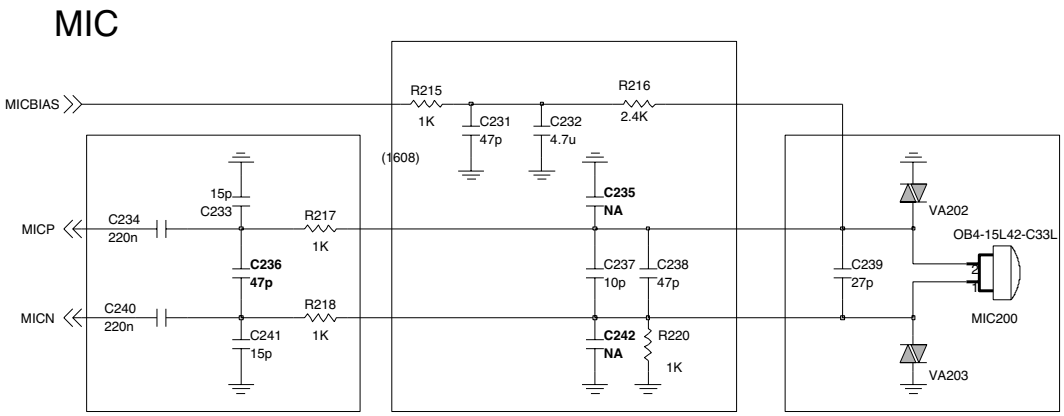

4. TROUBLE SHOOTING

Microphone Signal Flow

- MIC is enable by MICBIAS
- MICBIAS, MICP, MICN signals to ABB

Check Points

- Microphone bias
- Audio signal level of the microphone
- Soldering of components

Trouble Shooting Setup

- Initialize GSM MS test equipment.
- Connect PIF-UNION to the phone, and power on.
- Make a test call to 112.
- Make a sound in front of the microphone

Trouble Shooting Procedure

- Check the bias of the microphone.
- Check the audio signal path.
- Check the soldering.
- Check the microphone.
- Check the operation of FPCB

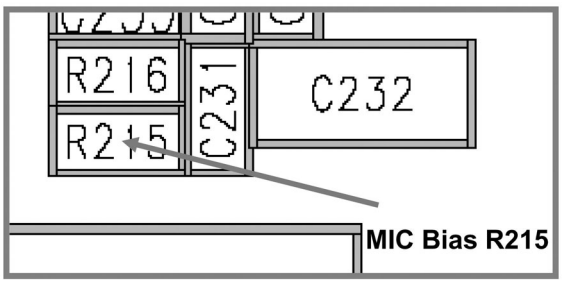

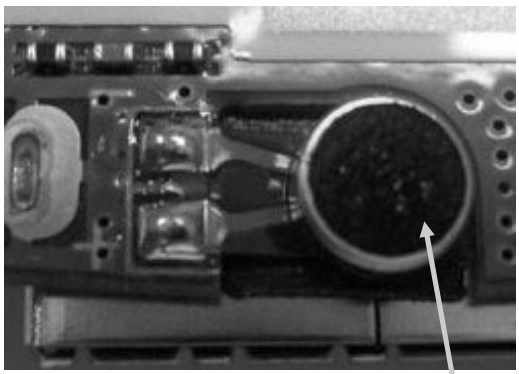

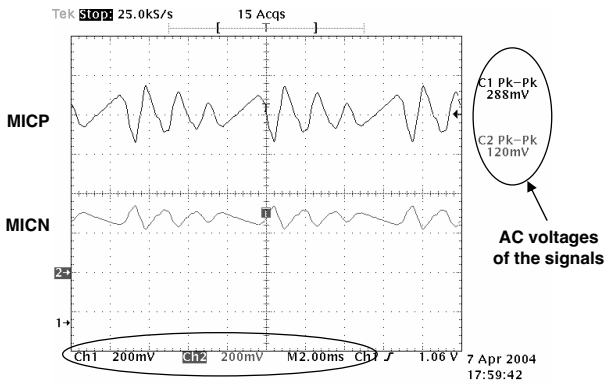

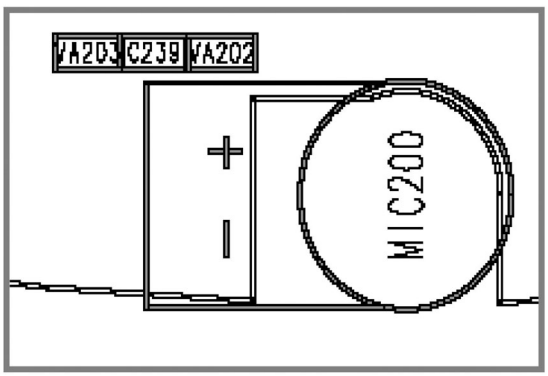

The waveforms at MICP and MICN

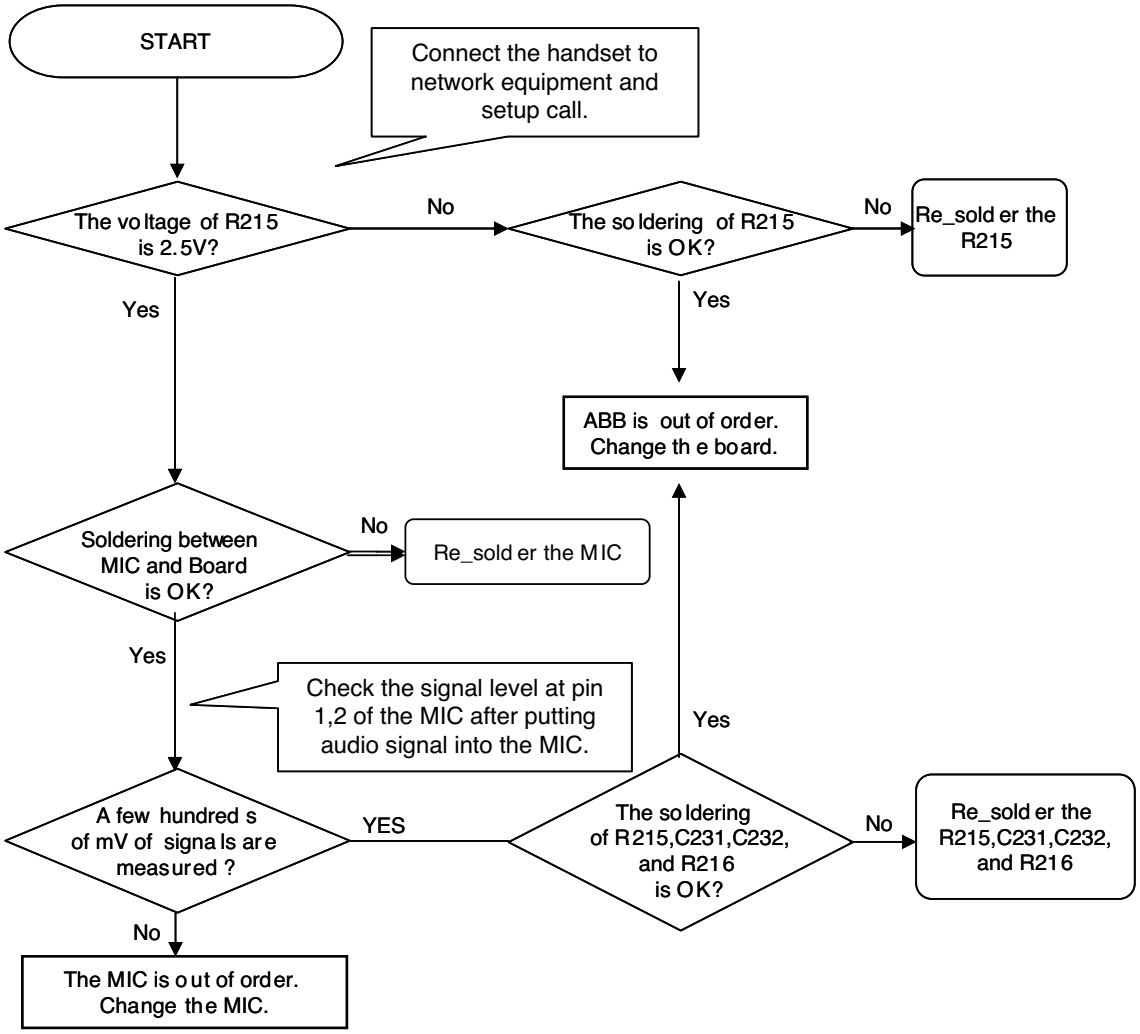
START
Connect the handset to network equipment and setup call.
The voltage of R215 is 2.5V?
No
The soldering of R215 is OK?
No
Re_solder the R215
Yes
Yes
ABB is out of order. Change th e board.
Soldering between MIC and Board is OK?
No
Re_solder the MIC
Yes
Check the signal level at pin 1,2 of the MIC after putting audio signal into the MIC.
Yes
A few hundreds of mV of signals are measured ?
YES
The soldering of R215,C231,C232, and R216 is OK?
No
Re_solder the R215,C231,C232, and R216
No
The MIC is out of order. Change the MIC.

4.10 Vibrator Trouble

Block Diagram

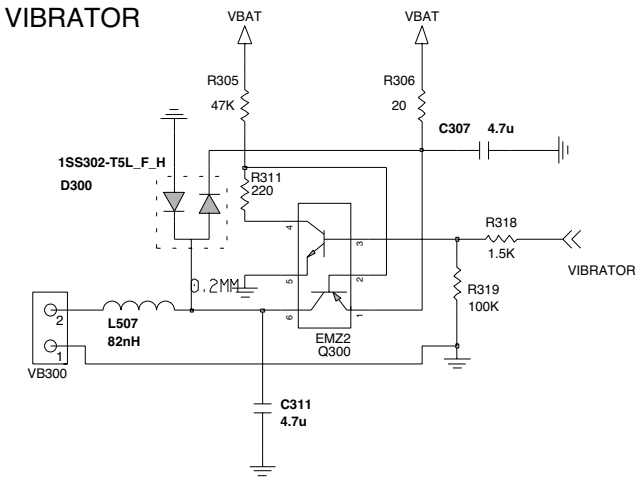

Vibrator Operation

- Vibrator is controlled by DBB GPIO
- When vibrator signal is high, vibrator is enabled

Check Points

- VCC lines (VBAT) of Q300
- Vibrator signal path
- The connection between the main board and vibrator module
- The soldering of socket
- The Vibrator (t=2.7mm)

Trouble Shooting Setup

- Connect PIF to the phone, and power on.
- Enter the engineering mode.
- Go to menu. “Baseband → Alert → Vibrator”

Trouble Shooting Procedure

- Check vibrator signal
- Check soldering of components
- Check connection of cable-to-socket
- Check vibrator PORON thickness

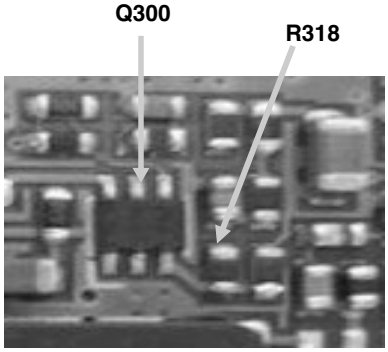

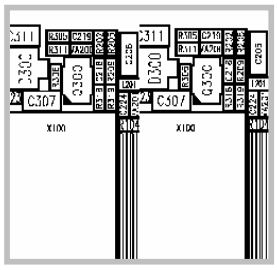

Vibrator Signal

Check soldering !

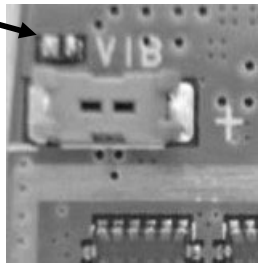

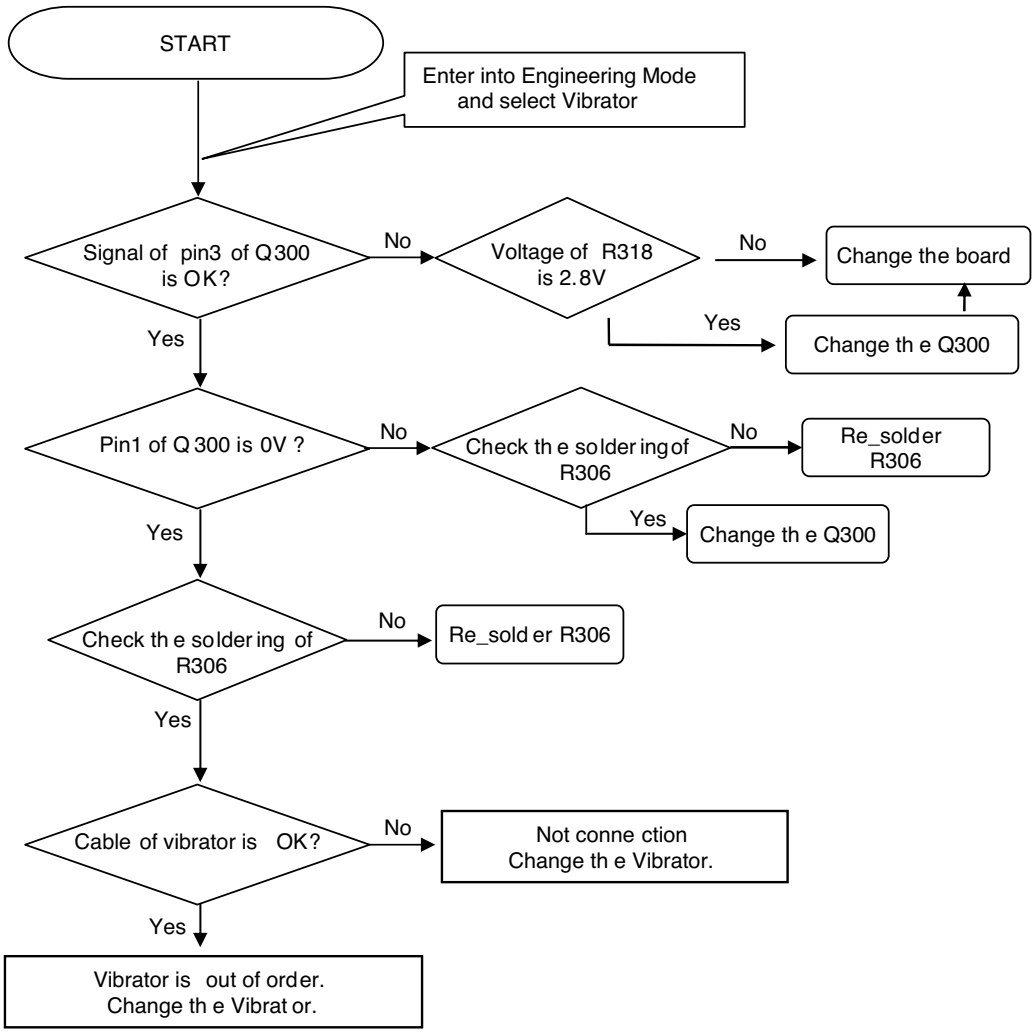
START
Enter into Engineering Mode and select Vibrator
Signal of pin3 of Q300 is OK?
No
Voltage of R318 is 2.8V
No
Change the board
Yes
Change th e Q300
Yes
Pin1 of Q 300 is 0V ?
No
Check th e solder ing of R306
No
Re_solder R306
Yes
Change th e Q300
Yes
Check th e solder ing of R306
No
Re_sold er R306
Yes
Cable of vibrator is OK?
No
Not conne ction Change th e Vibrator.
Yes
Vibrator is out of order. Change th e Vibrat or.

4.11 Keypad Backlight Trouble

Block Diagram

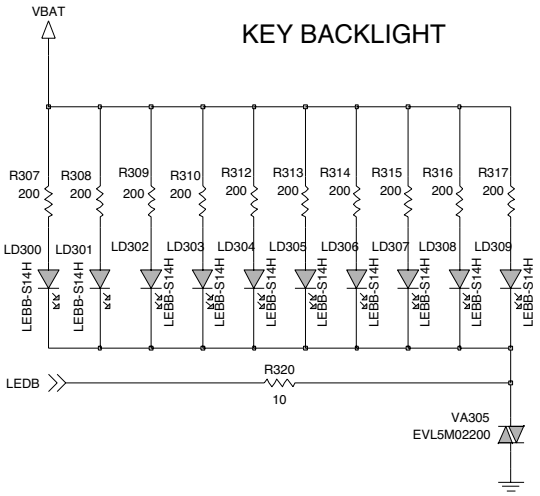

Backlight Operation

- The keypad LED backlight is controlled with LEDB signal.
- Keypad_Main signal from DBB.
- The LEDs are forward biased and turned on.

Trouble Shooting Setup

- Connect PIF-UNION to the phone, and power on.
- Enter the engineering mode.
- Go to menu. “Baseband → LED → Backlight → Keypad on”

Trouble Shooting Procedure

- Check the soldering of components
- Check the LEDB signal
- Check LEDs

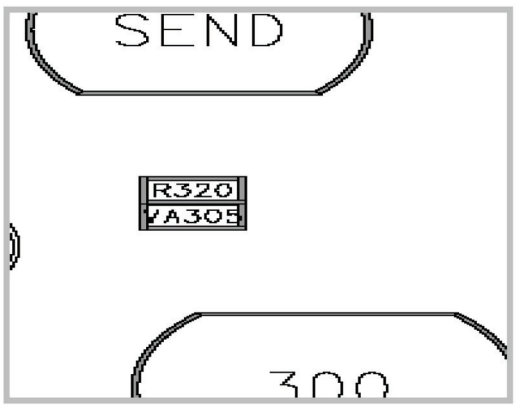

Check Points

- LEDB signal
- LEDs

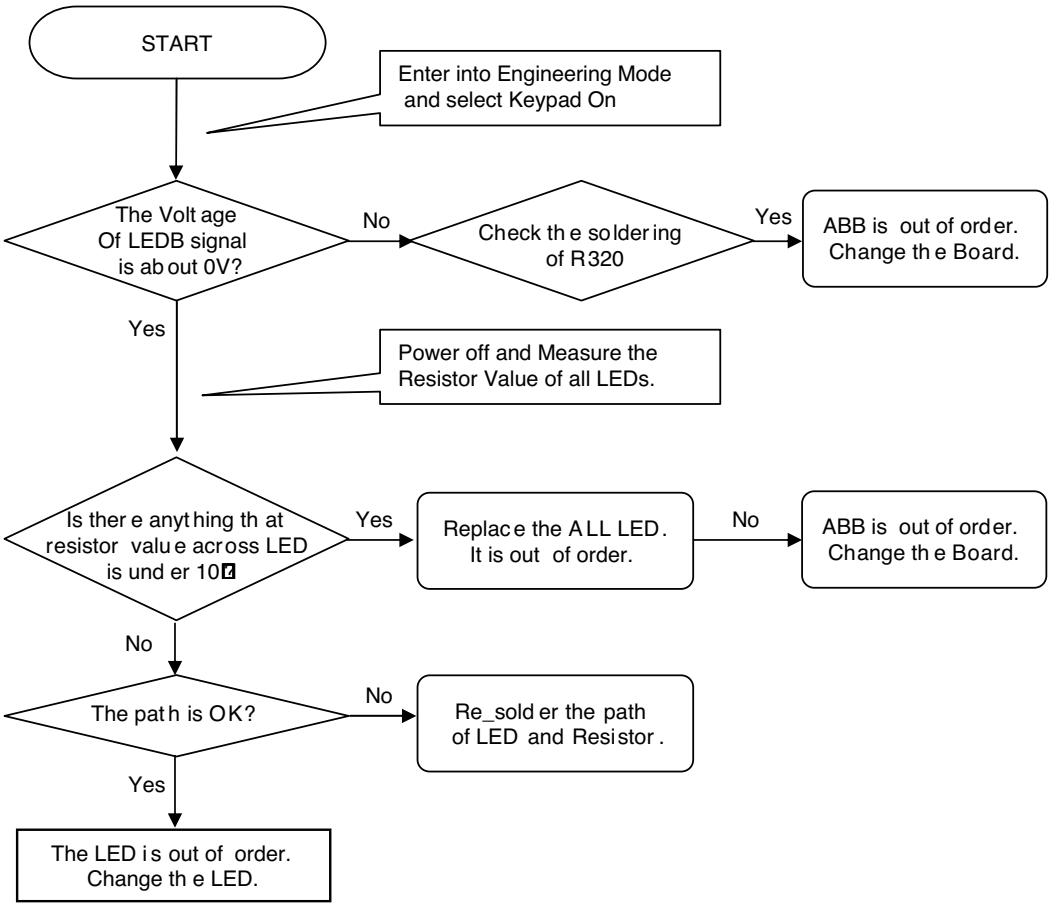
START
Enter into Engineering Mode and select Keypad On
The Voltage Of LEDB signal is about 0V?
No
Check the soldering of R320
Yes
ABB is out of order. Change the Board.
Yes
Power off and Measure the Resistor Value of all LEDs.
Is there anything that resistor value across LED is under 10
Yes
Replace the ALL LED. It is out of order.
No
ABB is out of order. Change the Board.
No
The path is OK?
No
Re_solder the path of LED and Resistor.
Yes
The LED is out of order. Change the LED.

4.12 SIM Detect Trouble

Block Diagram

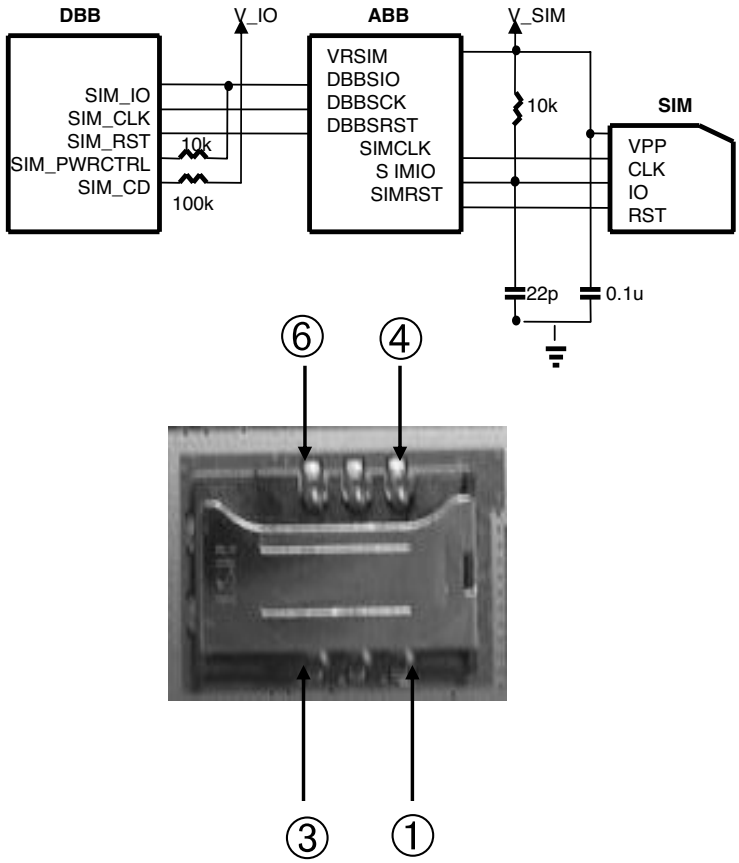

Connection between SIM and DBB

- SIM_CLK, SIM_IO, SIM_RST

Trouble Shooting Setup

- Insert the SIM into socket
  - -. Connect PIF to the phone, and power on.

Check Points

- Contact between SIM and socket
  - -. Soldering of SIM socket

Trouble Shooting Procedure

- Check the power supply.
  - -. Check the soldering of SIM socket.
  - -. Check the SIM.

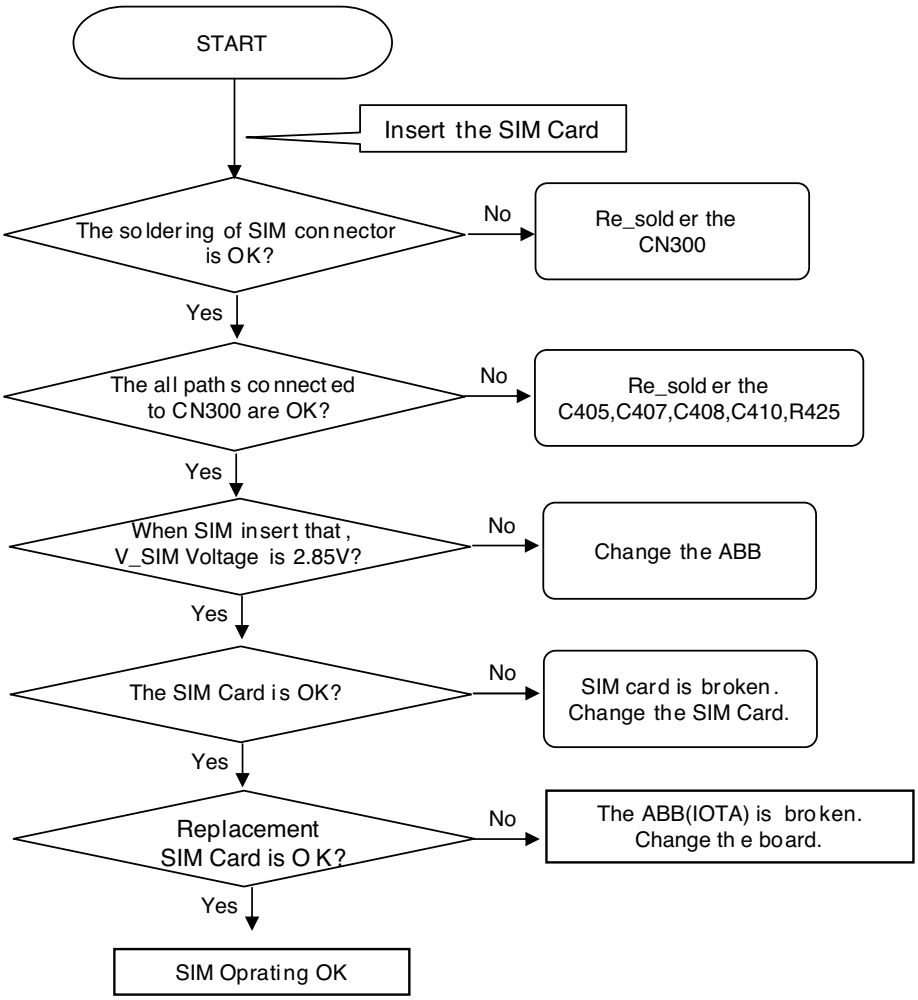
START
Insert the SIM Card
The soldering of SIM connector is OK?
No
Re_solder the CN300
Yes
The all paths connected to CN300 are OK?
No
Re_solder the C405,C407,C408,C410,R425
Yes
When SIM insert that, V_SIM Voltage is 2.85V?
No
Change the ABB
Yes
The SIM Card is OK?
No
SIM card is broken. Change the SIM Card.
Yes
Replacement SIM Card is OK?
No
The ABB(IOTA) is broken. Change the board.
Yes
SIM Oprating OK

4.13 Earphone Trouble

Block Diagram

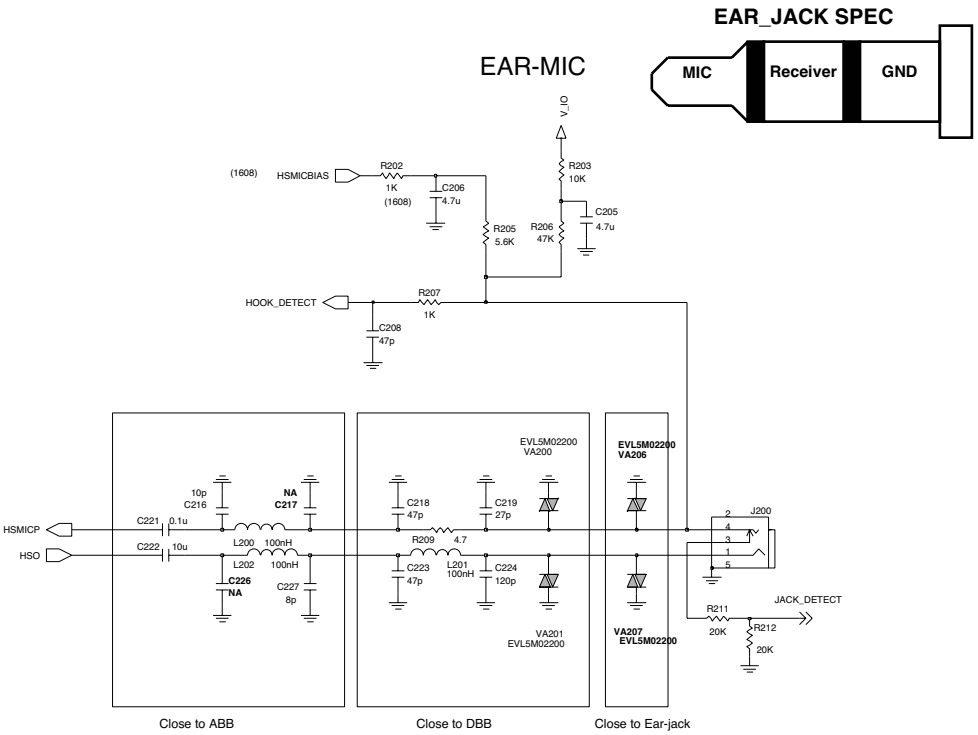

Earphone Detecting Operation

- The ABB operates A/D conversion continuously and if the voltage of “HOOK_DETECT” node goes to about 40mV, it detects hook switch is pushed in call state.
- First - “HOOK_DETECT” had Pull up by V_IO
- Second - “HOOk_DETECT” Change to Pull Down by Mic resistor of Earmic

Earphone Sending Path

- HSMICP is the audio signal from the microphone of the earphone.
- C221, L200 and R209 make the path of the audio signal from the microphone of the earphone.
- This audio signal is delivered to ABB(IOTA).

Earphone Receiving Path

- HSO is the audio signal from ABB(IOTA).
- C222,L202 and L201 make the path of the audio signal from ABB to earphone.

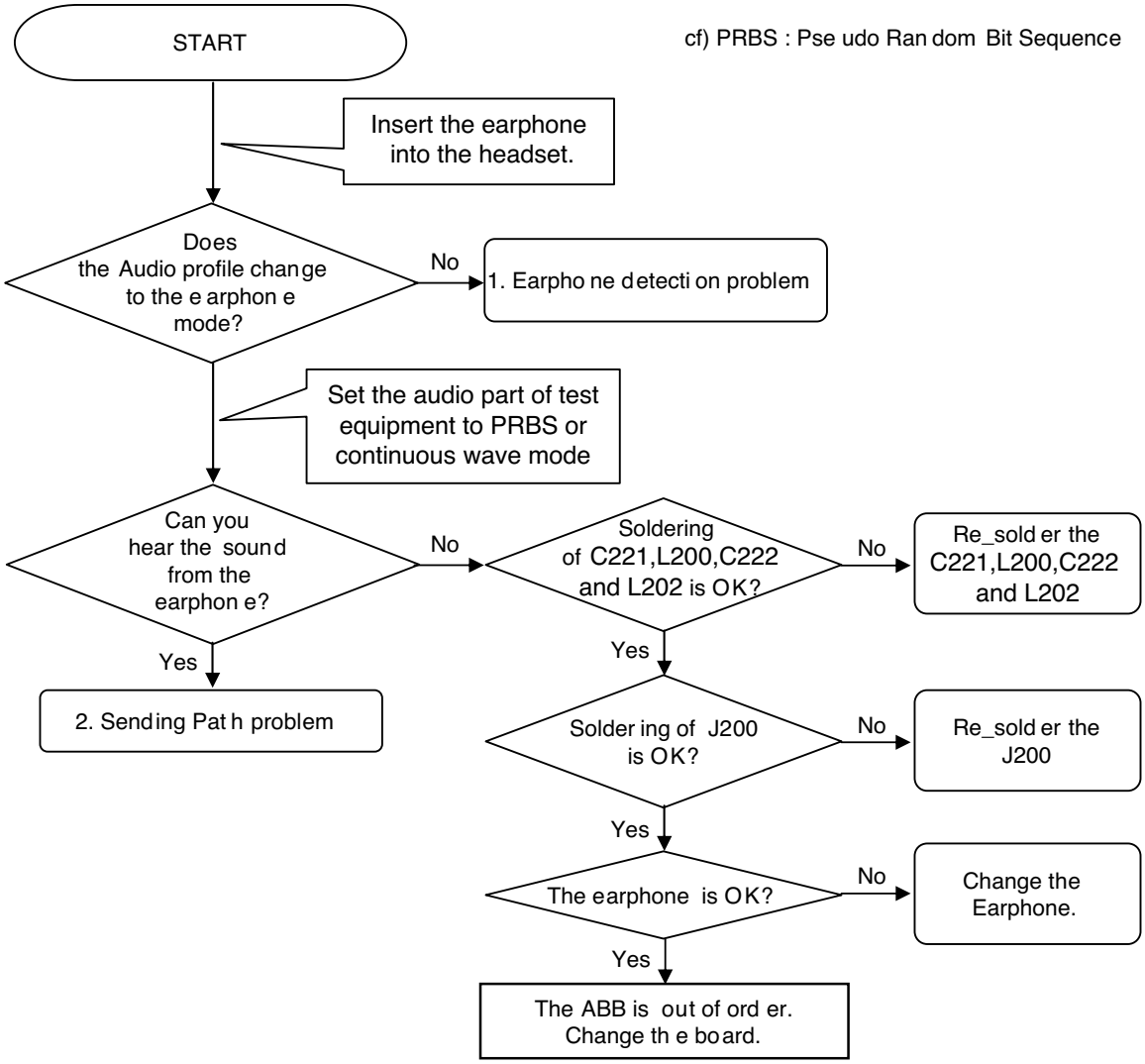
START
cf) PRBS : Pse udo Ran dom Bit Sequence
Insert the earphone into the headset.
Does the Audio profile change to the e arphon e mode?
No
1. Earpho ne detecti on problem
Set the audio part of test equipment to PRBS or continuous wave mode
Can you hear the sound from the earphon e?
No
Soldering of C221,L200,C222 and L202 is OK?
No
Re_sold er the C221,L200,C222 and L202
Yes
2. Sending Pat h problem
Yes
Solder ing of J200 is OK?
No
Re_sold er the J200
Yes
The earphone is OK?
No
Change the Earphone.
Yes
The ABB is out of ord er. Change th e boa rd.

4. TROUBLE SHOOTING

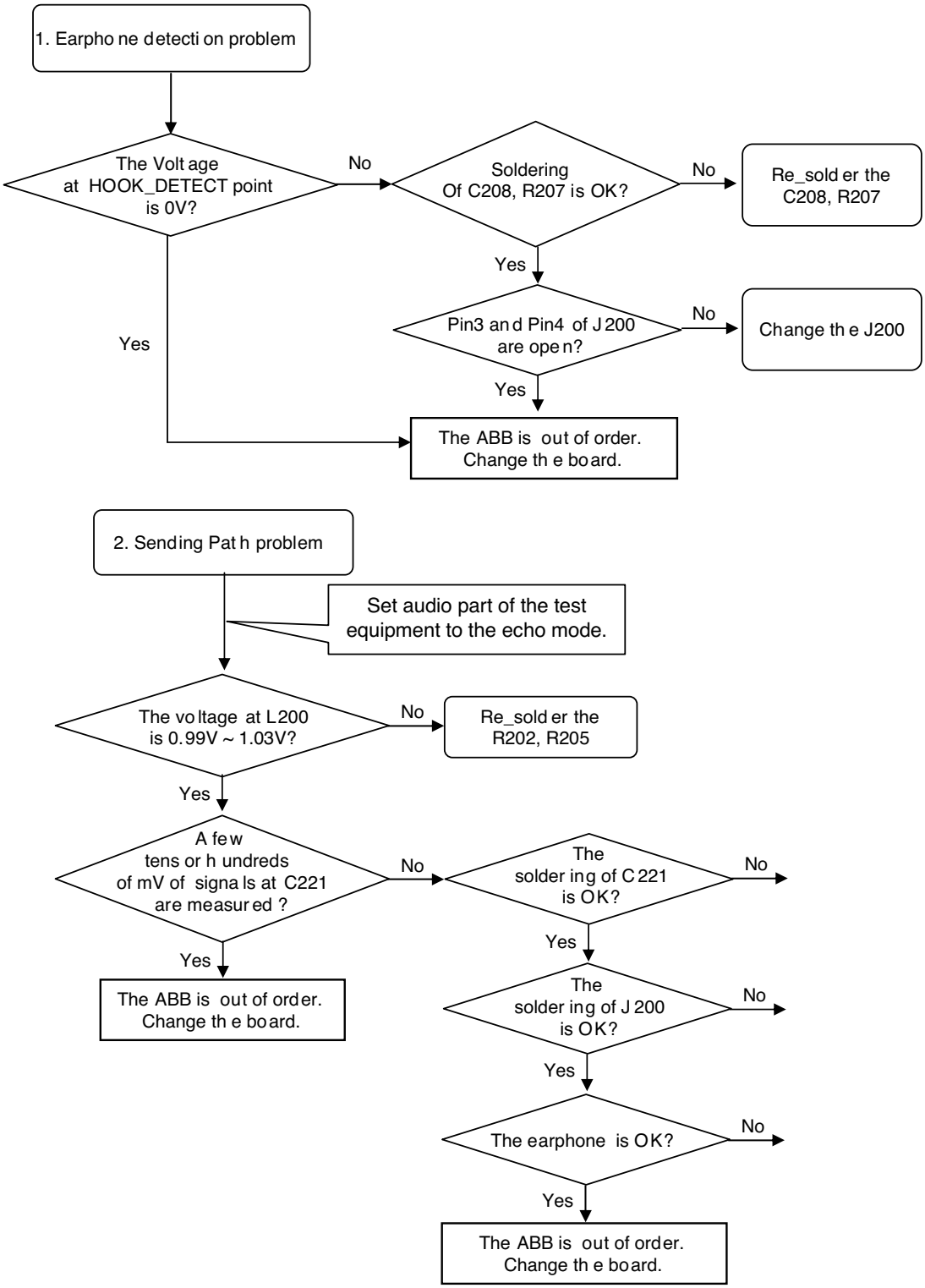

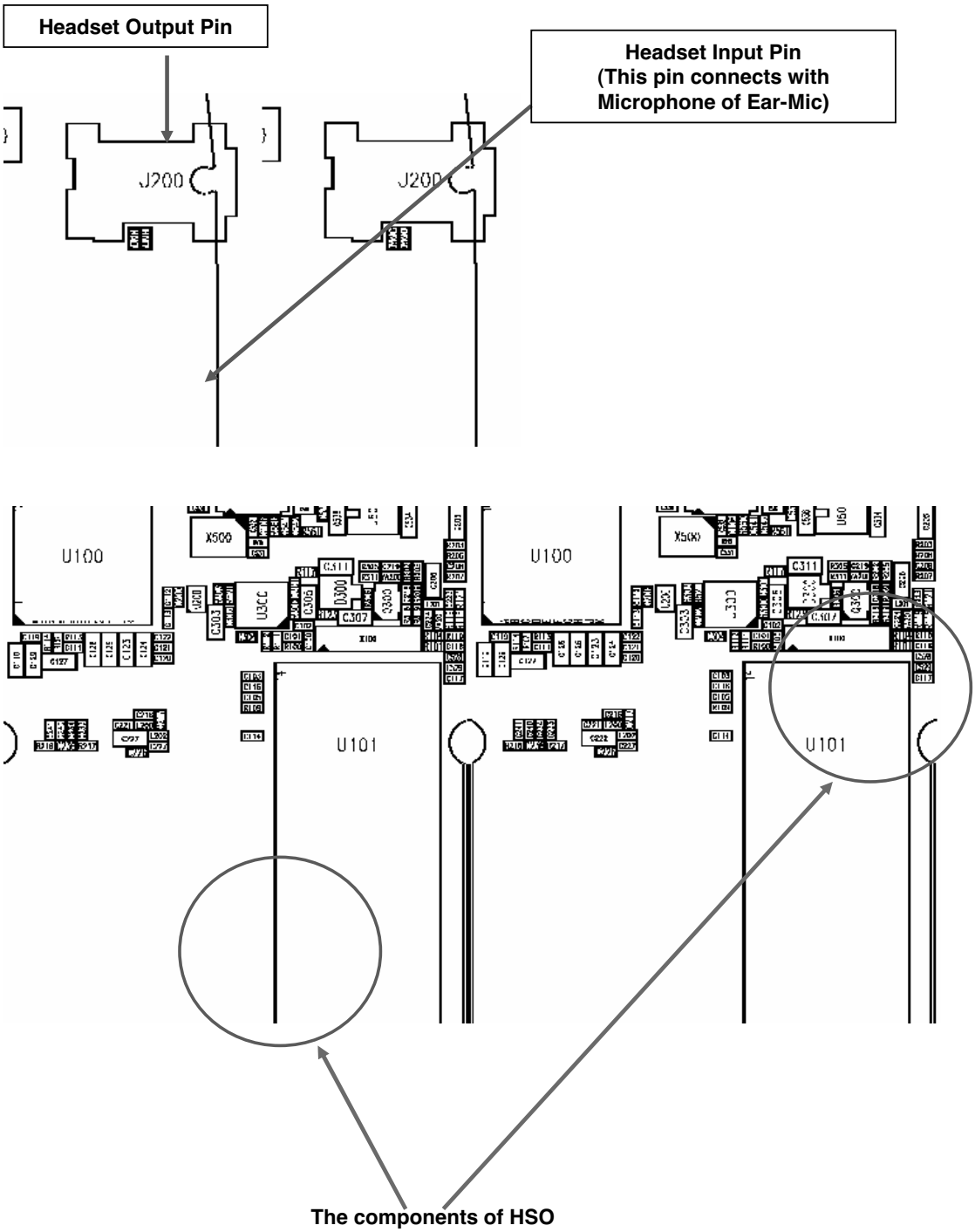
Headset Output Pin
Headset Input Pin
(This pin connects with
Microphone of Ear-Mic)
J200
J200
U100
U100
U101
U101
The components of HSO

4.14 RF Rx pass Trouble Shooting

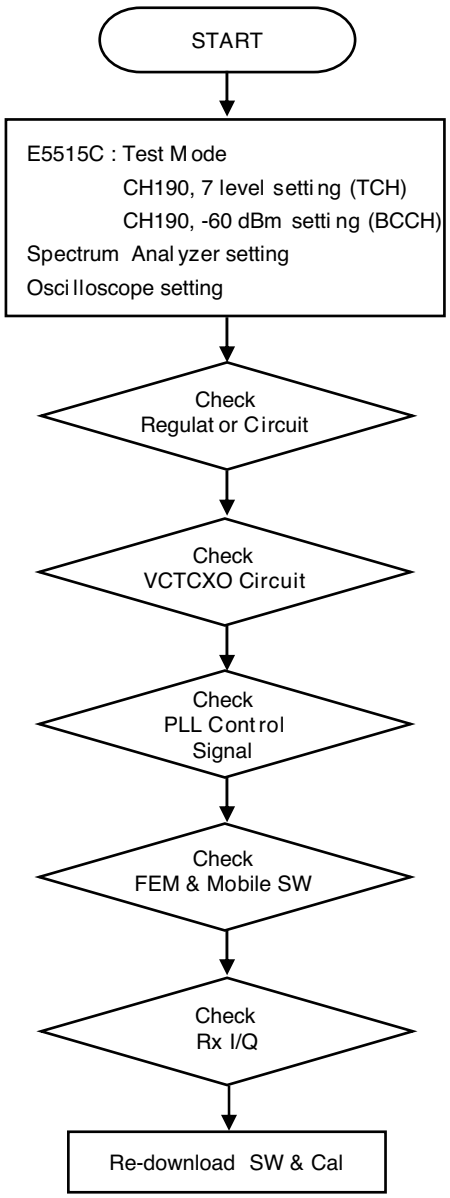

4.14.1 Checking Regulator Circuit (Rx pass continued)

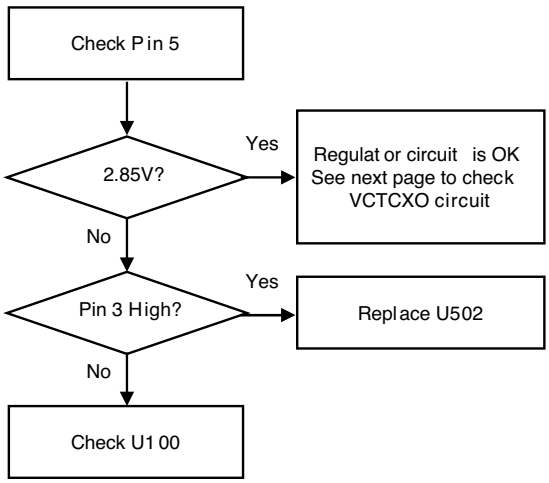

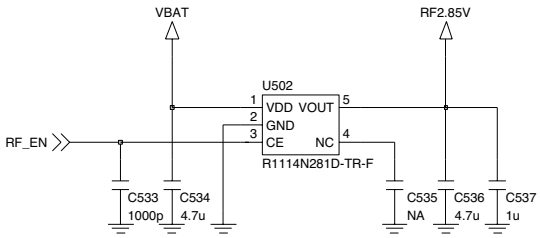

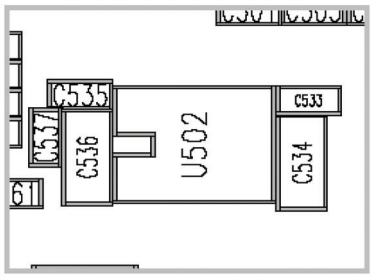

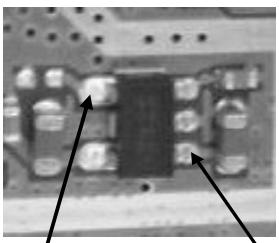

PIN3 PIN5

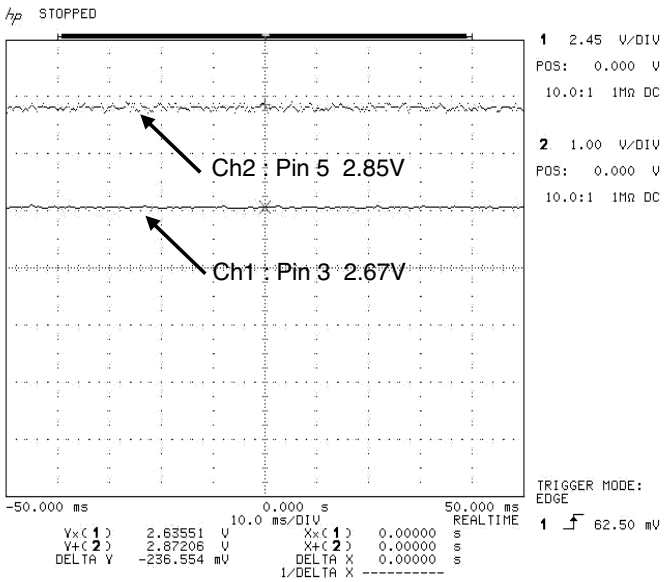

4.14.2 Checking VCTCXO Circuit (Rx pass continued)

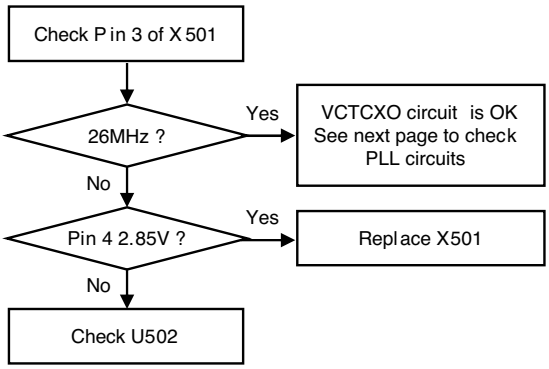

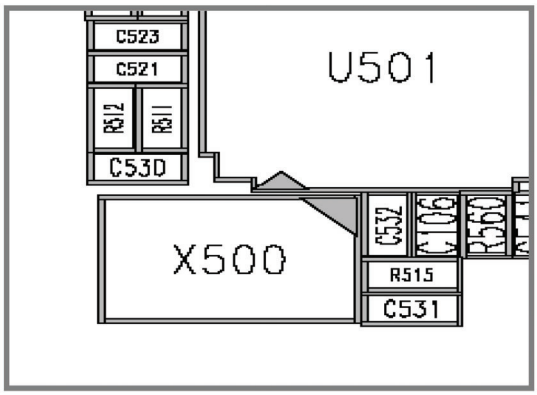

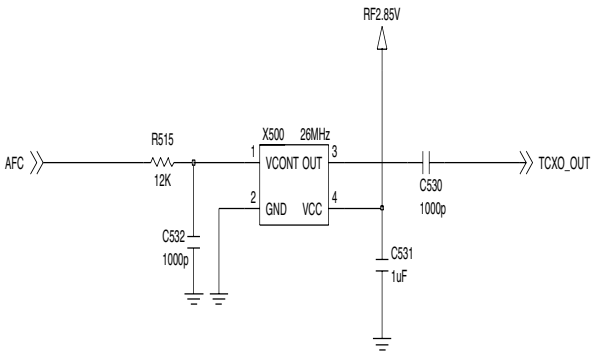

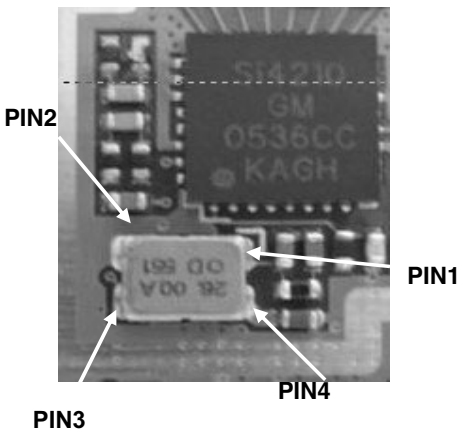

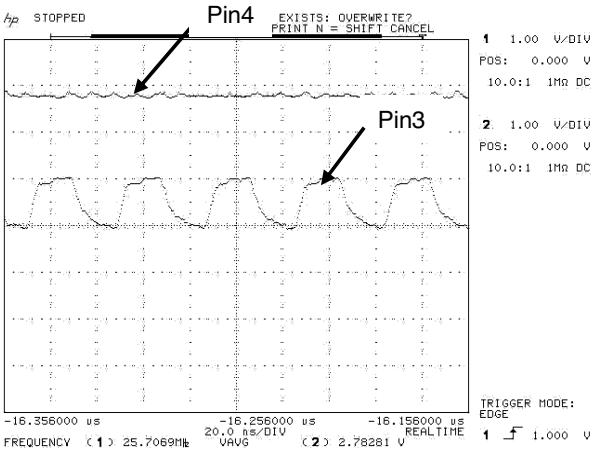

4.14.3 Checking PLL Circuit (Rx pass continued)

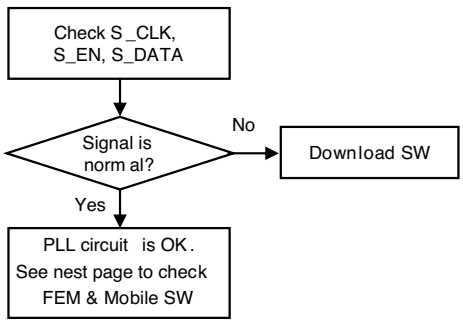

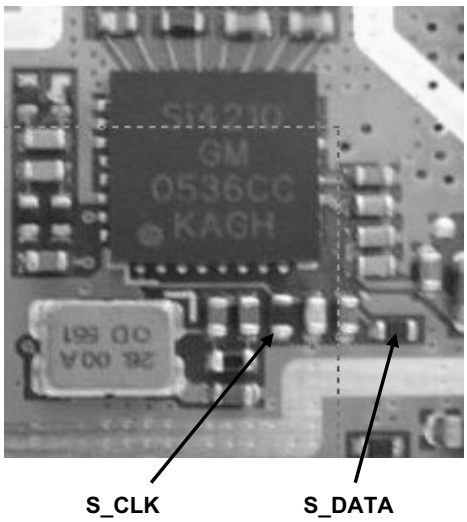

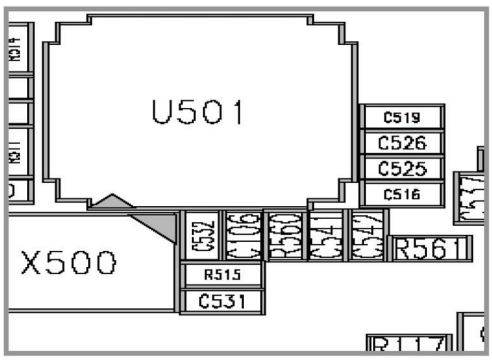

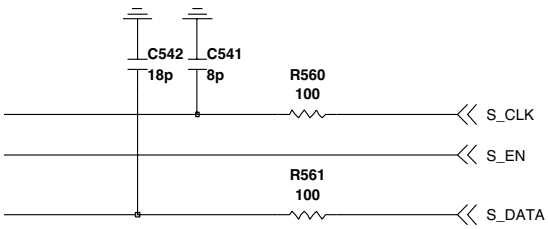

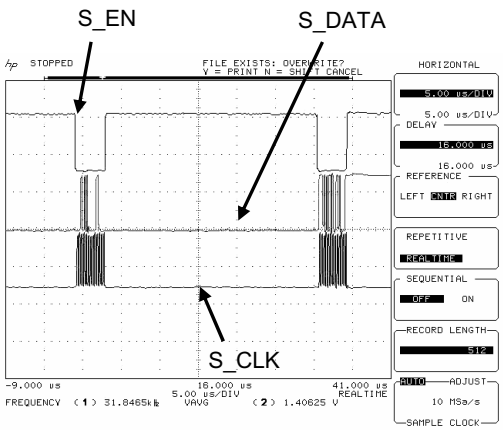

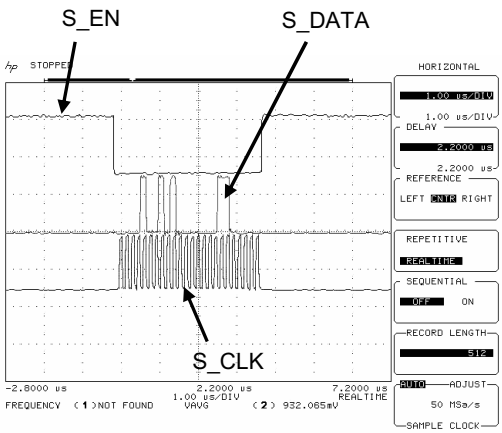

4.14.4 Checking FEM & Mobile SW (1) (Rx pass continued)

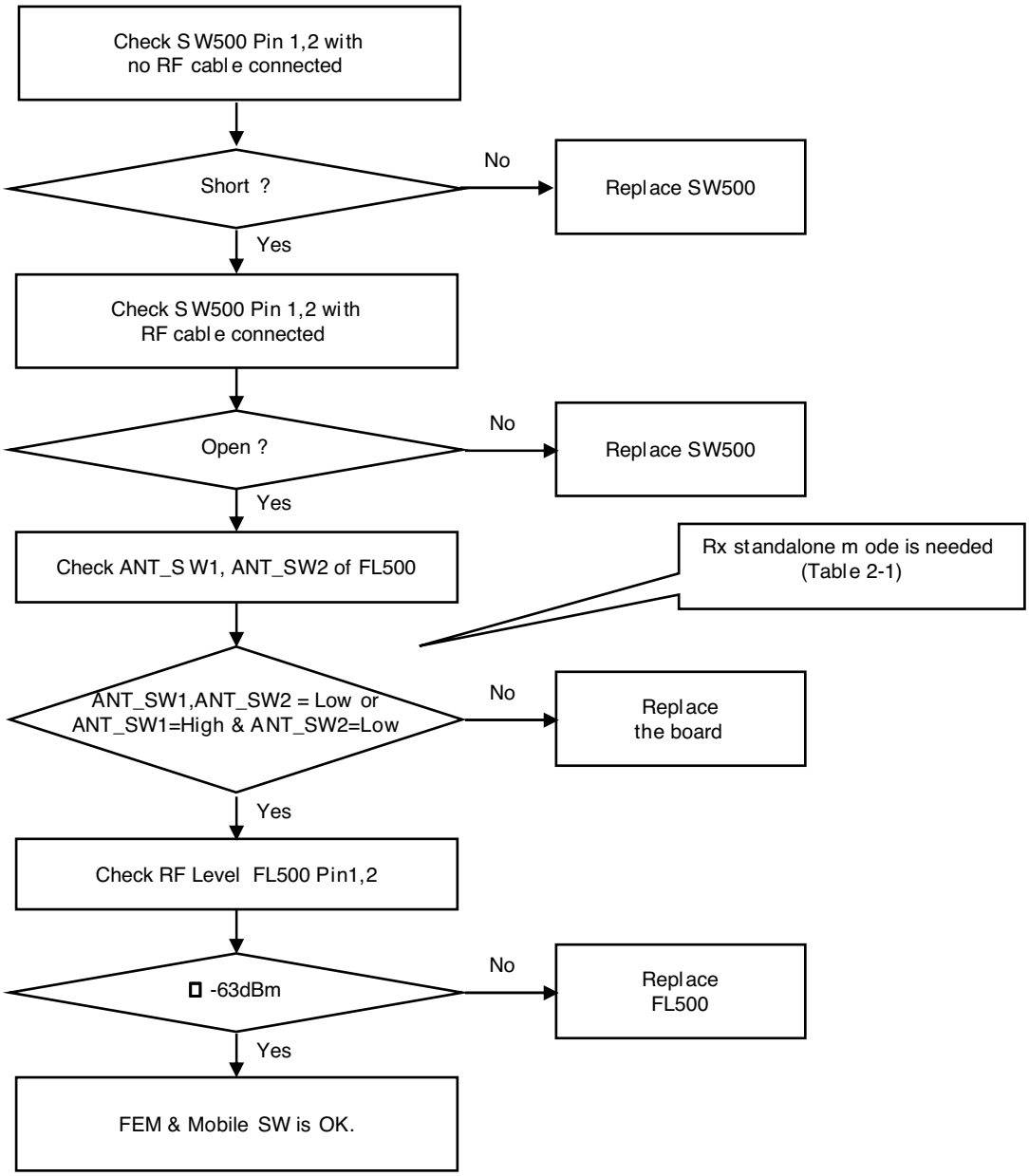

4.14.5 Checking FEM & Mobile SW (2) (Rx pass continued)

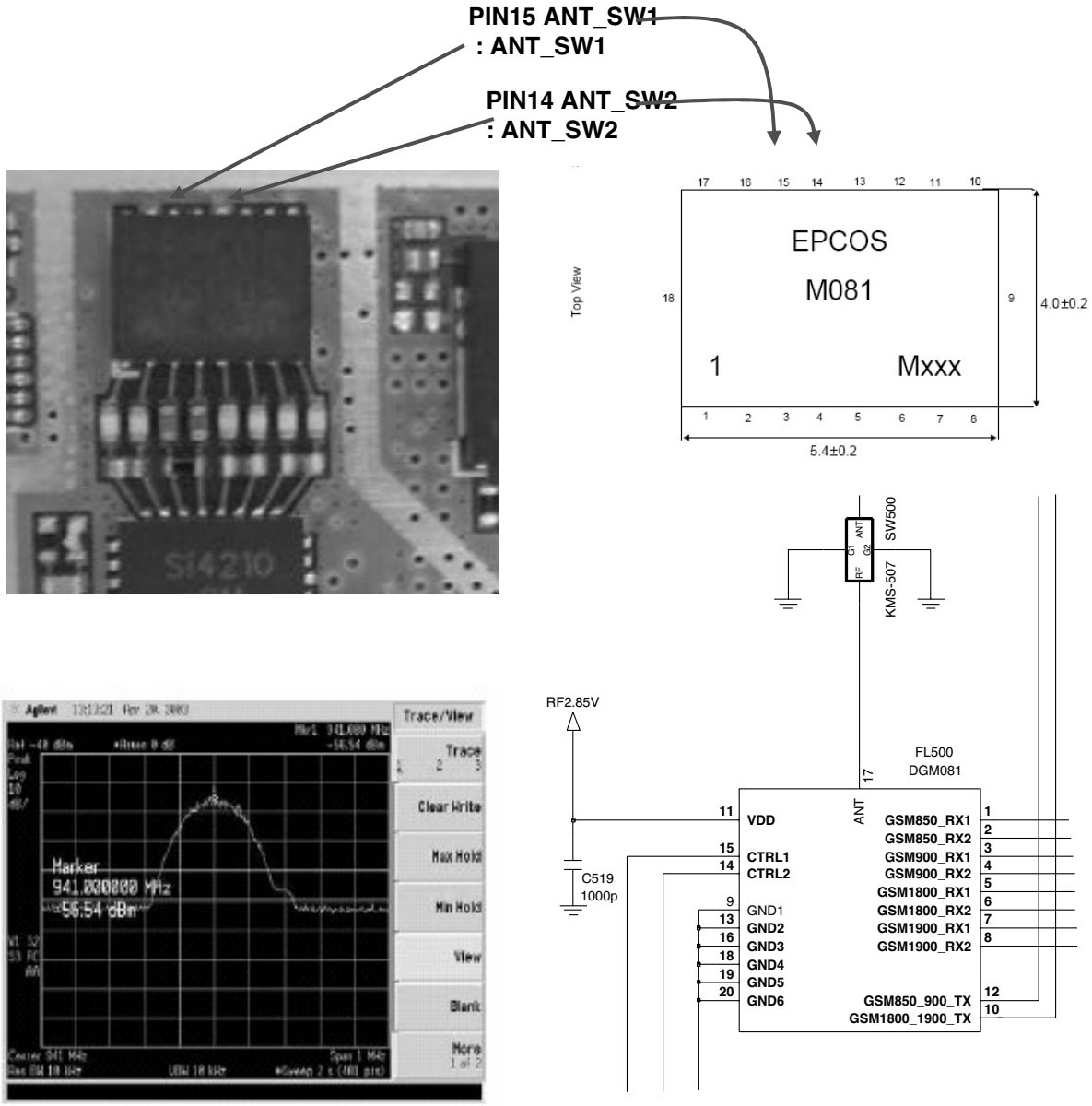

4.14.6 Checking Rx I/Q (Rx pass continued)

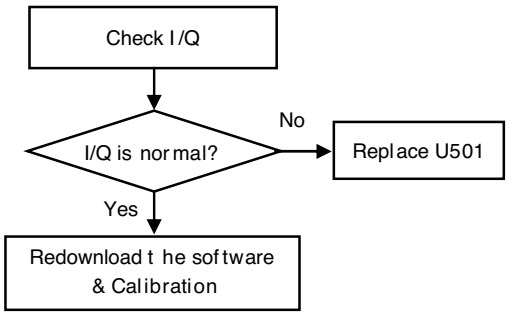

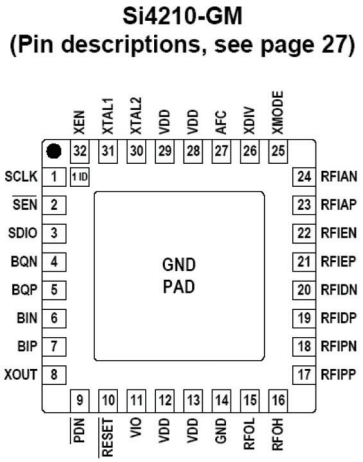

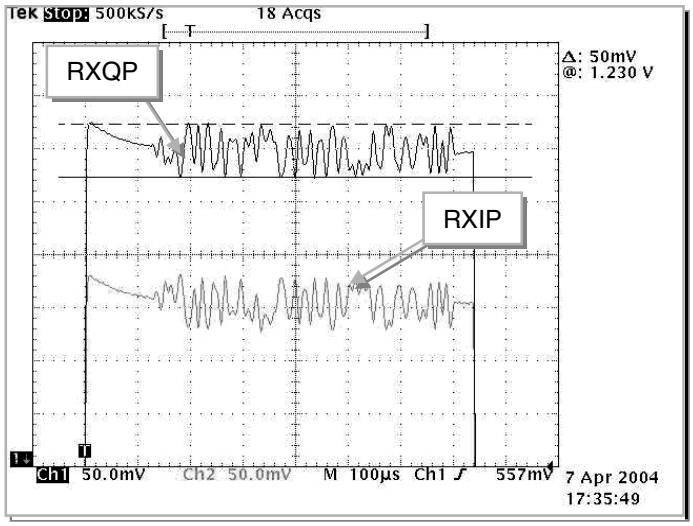

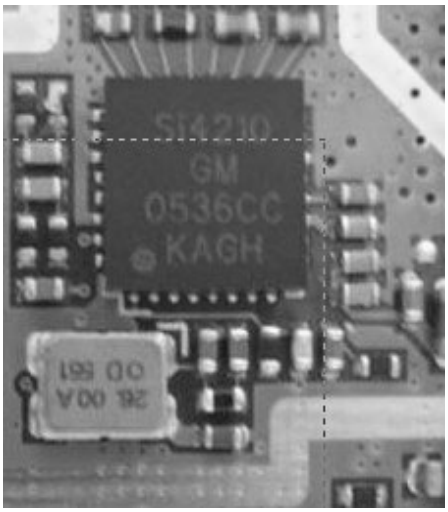

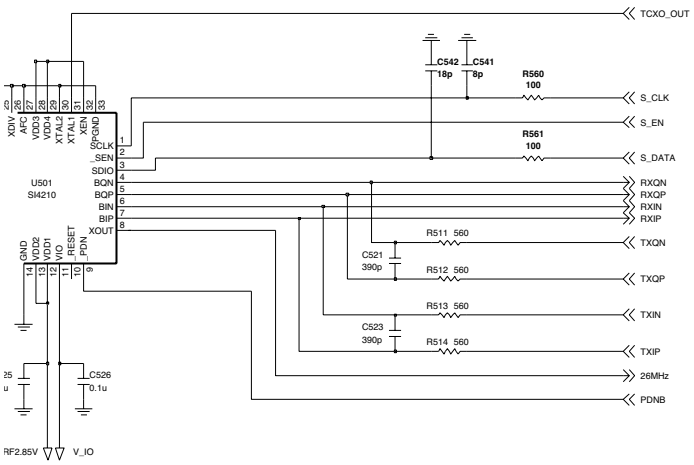

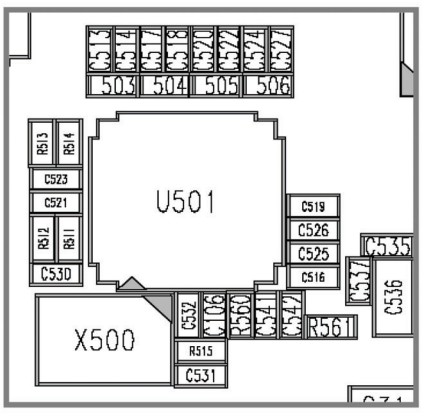

4.15 RF Tx pass Trouble Shooting

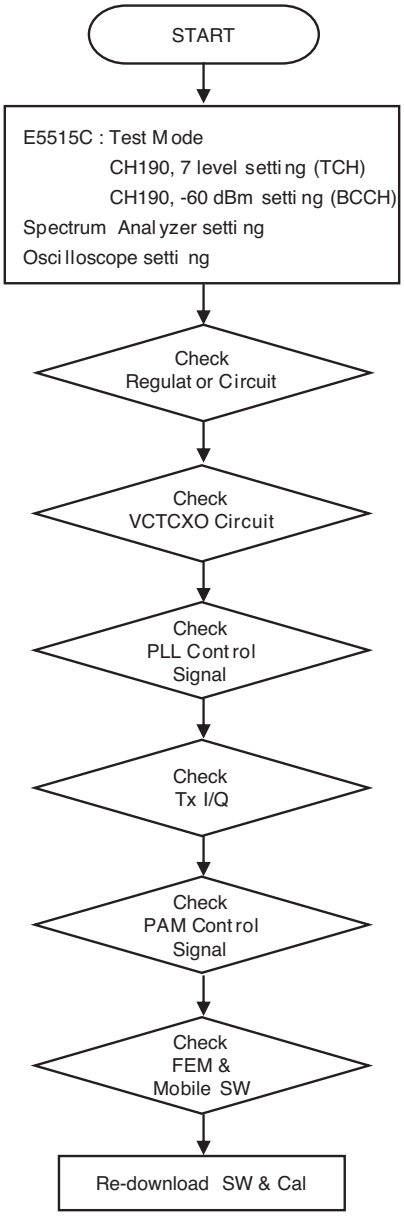

4.15.1 Checking Regulator Circuit (Tx pass continued)

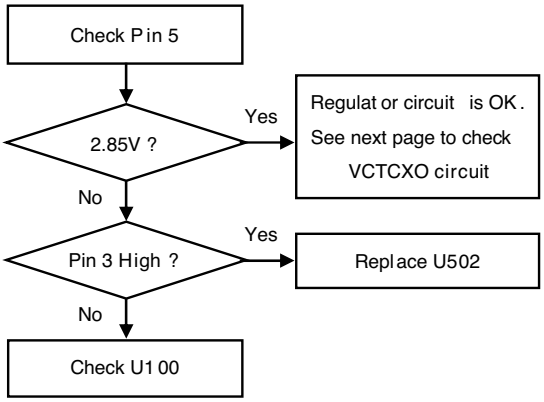

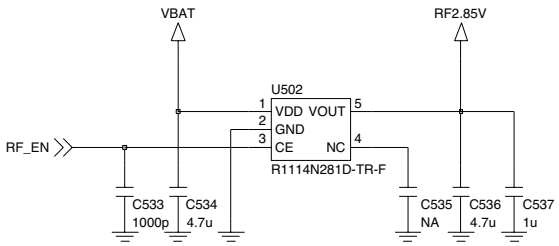

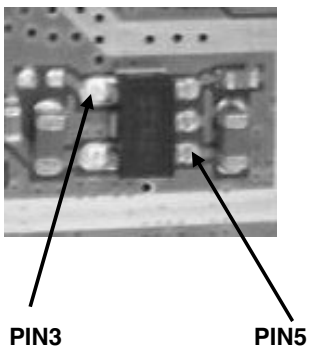

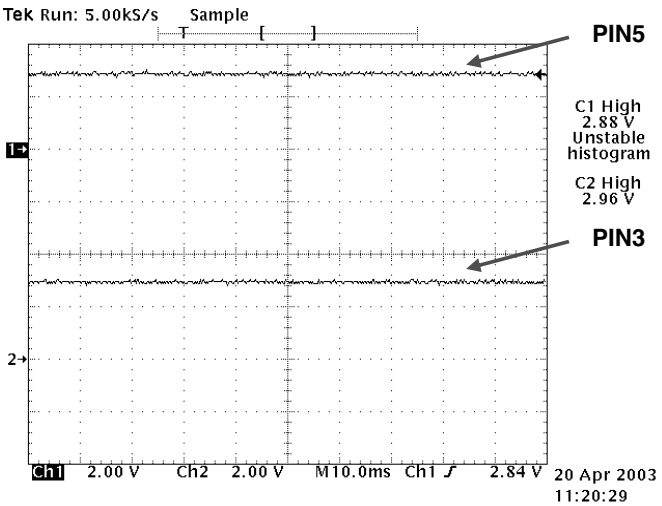

4.15.2 Checking VCTCXO Circuit (Tx pass continued)

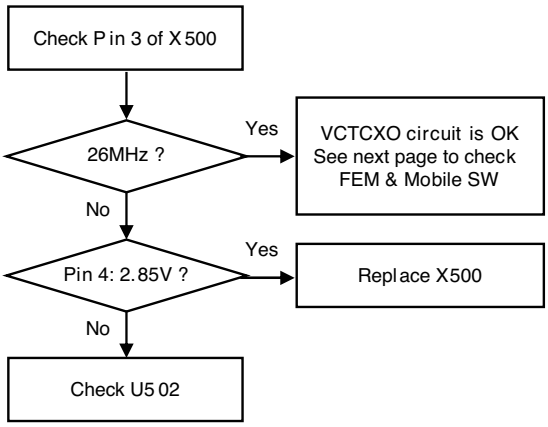

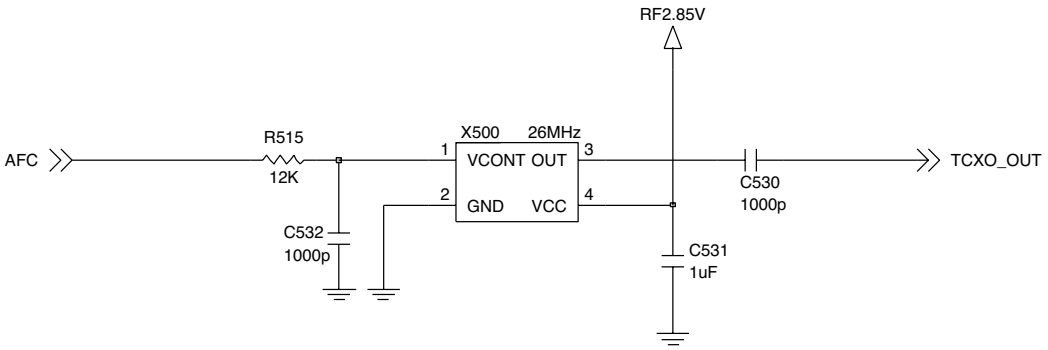

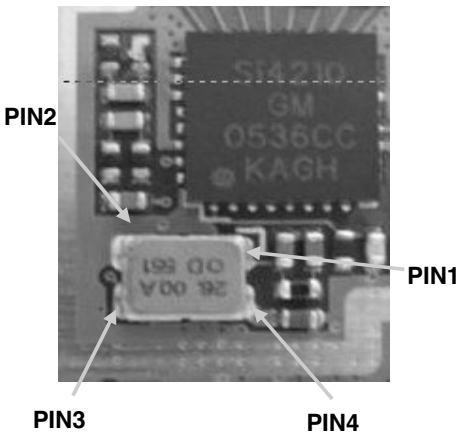

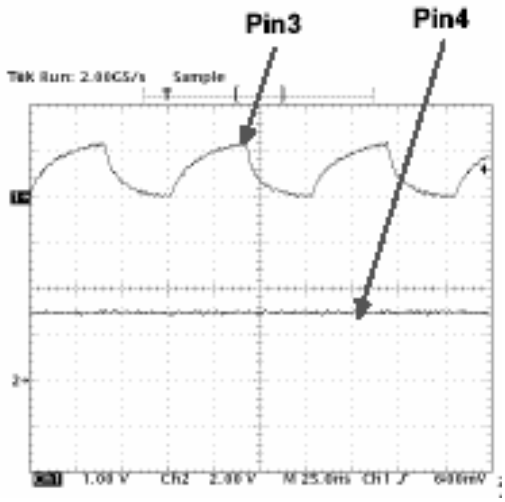

4.15.3 Checking PLL Circuit (Tx pass continued)

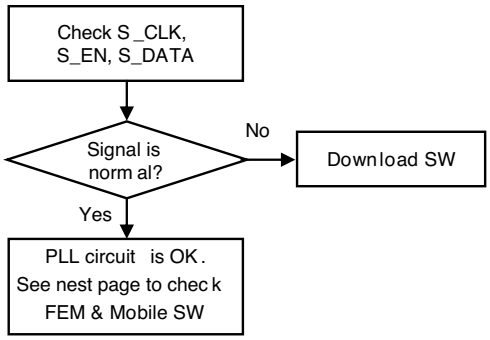

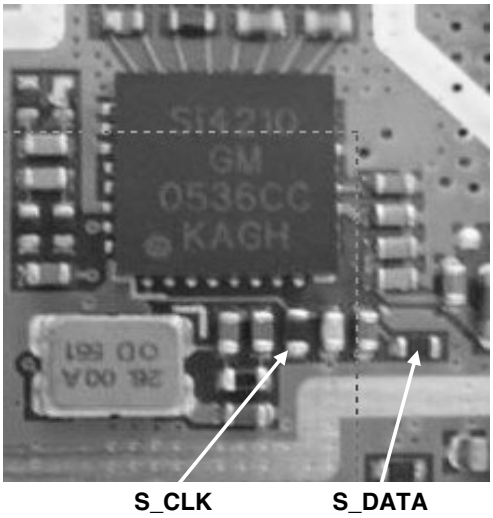

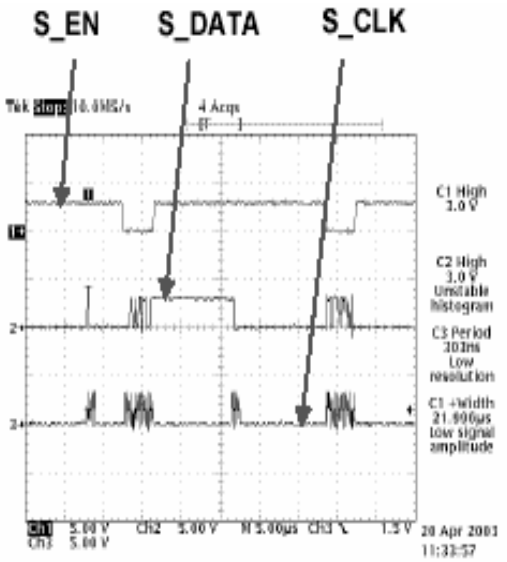

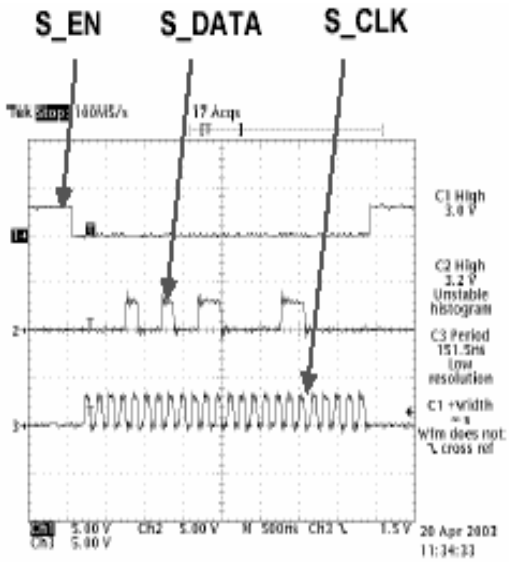

4.15.4 Checking Tx I/Q (Tx pass continued)

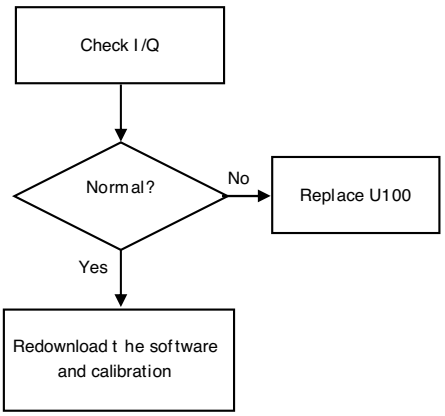

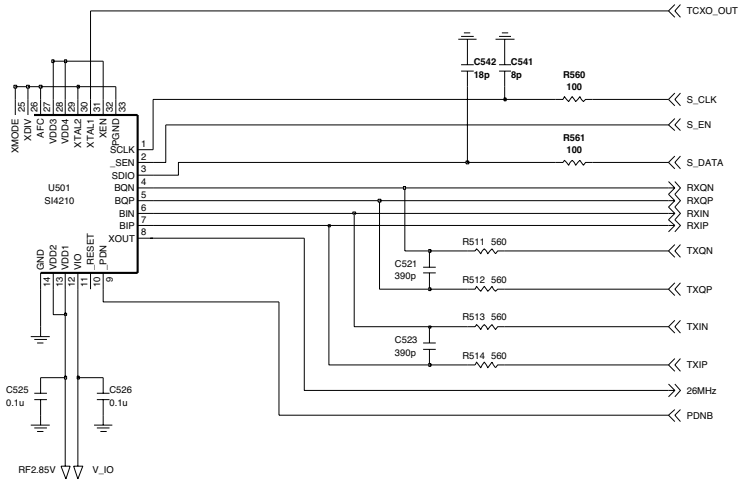

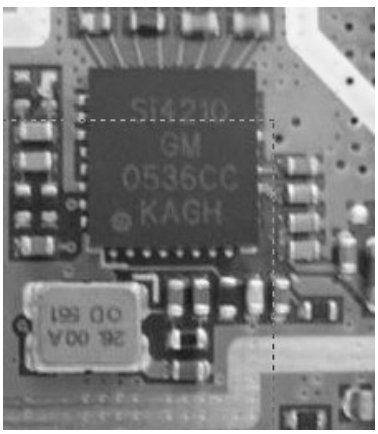

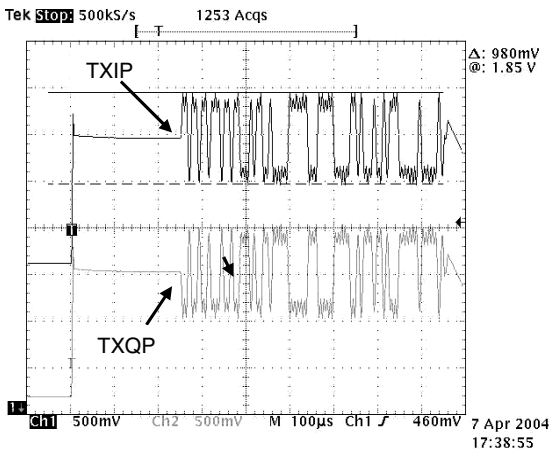

4.15.5 Checking PAM Control Signal (Tx pass continued)

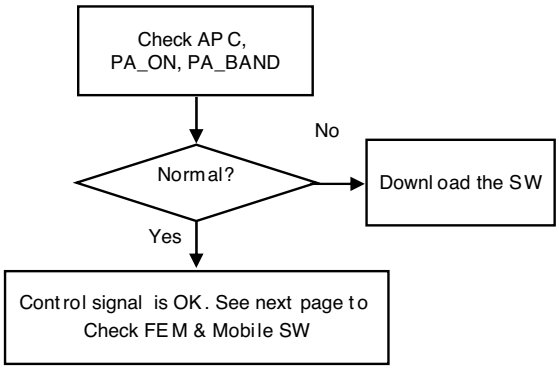

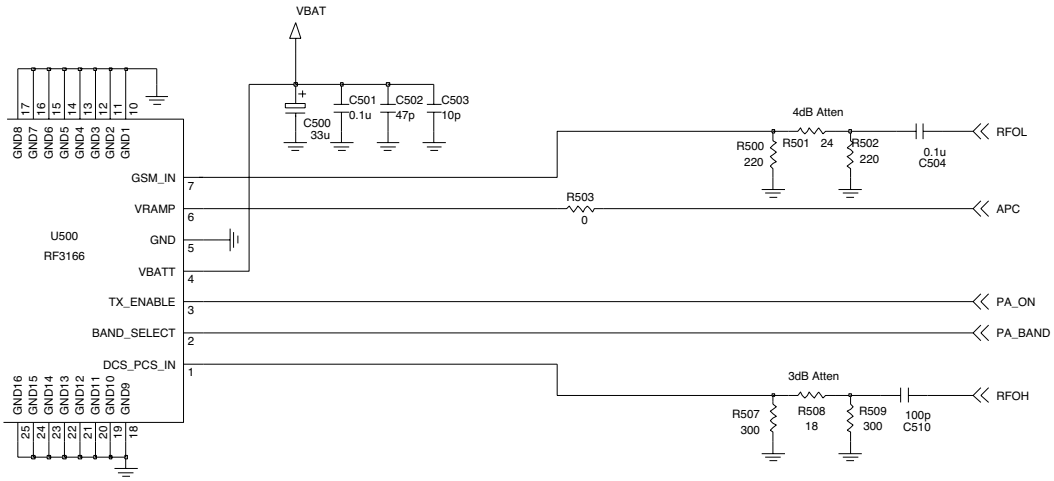

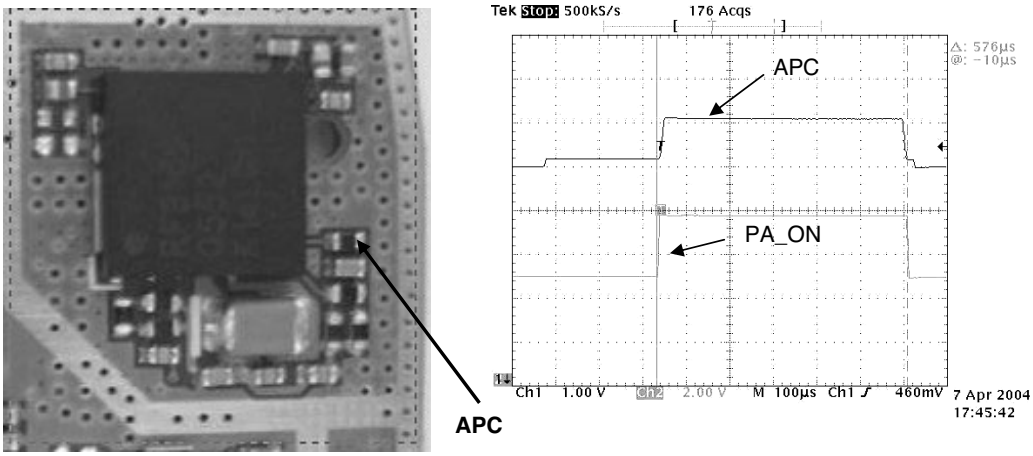

4.15.6 Checking FEM & Mobile SW (1) (Tx pass continued)

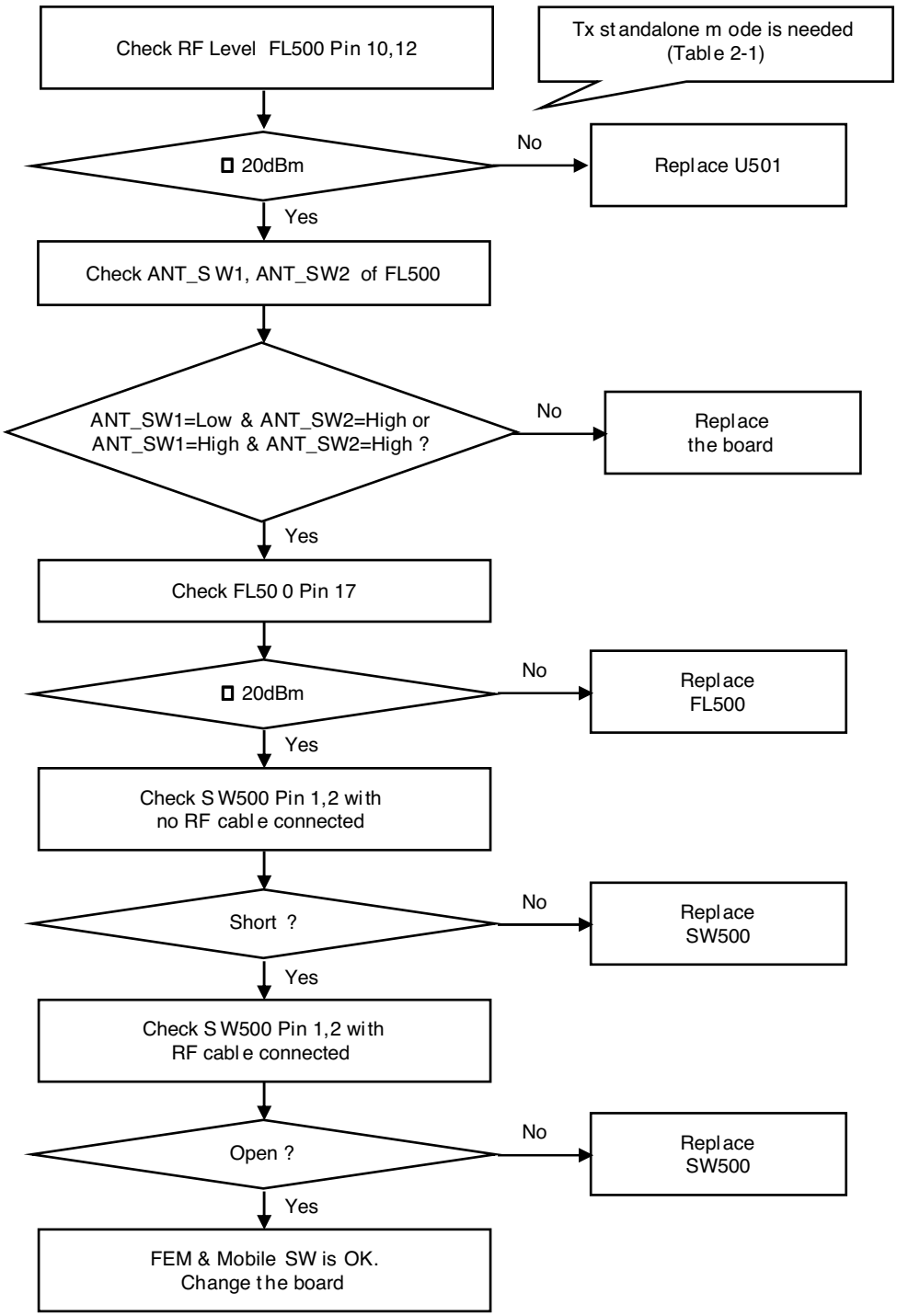

4.15.7 Checking FEM & Mobile SW (2) (Tx pass continued)

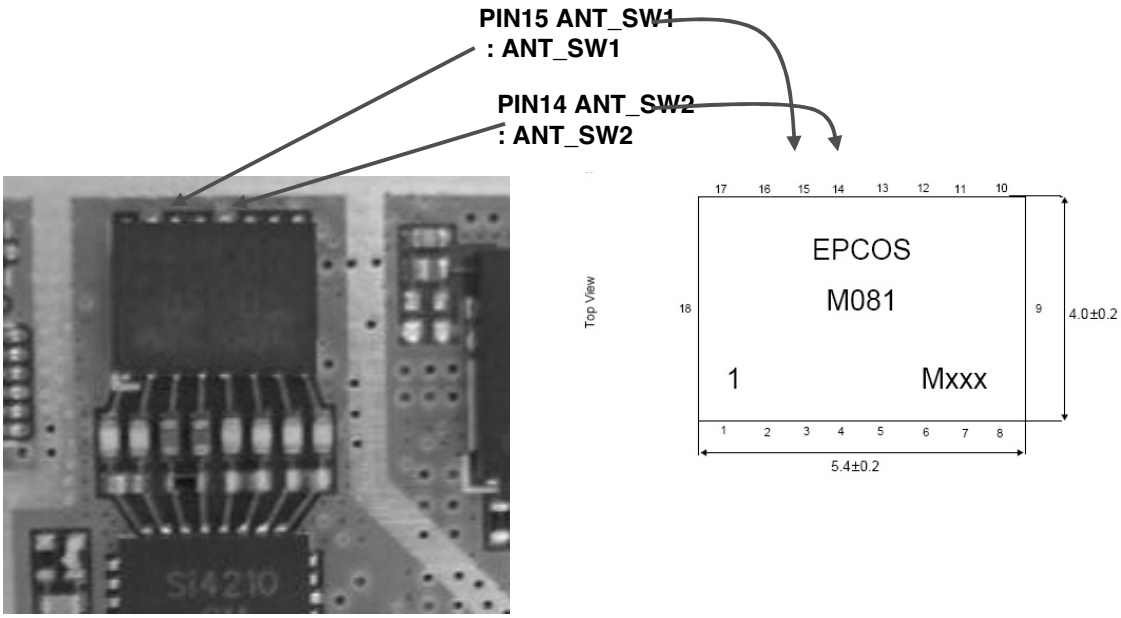

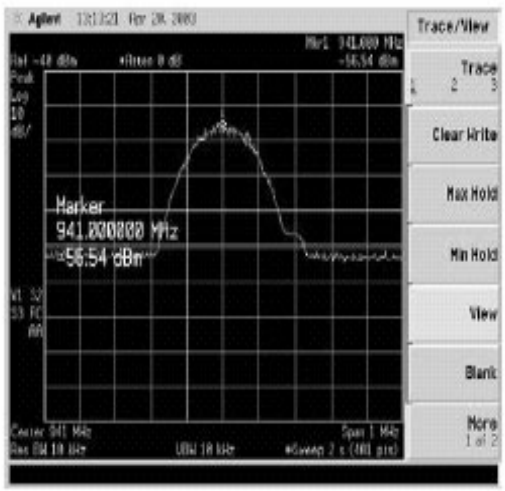

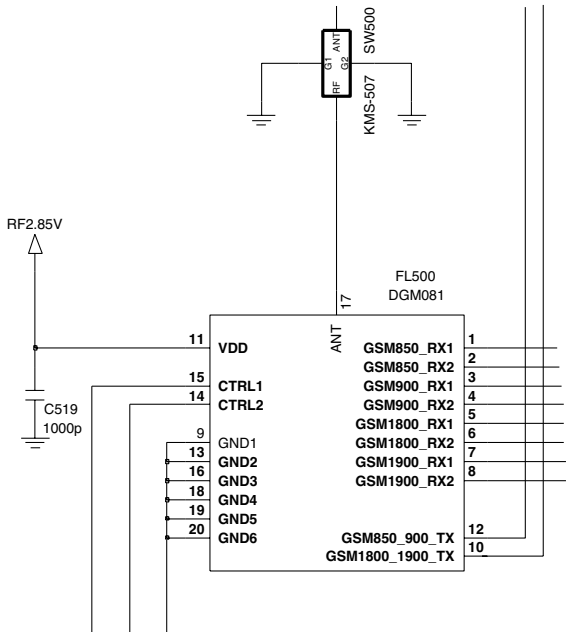

5. DOWNLOAD

5.1 Download Setup

5.1.1 In case of using the Data kit

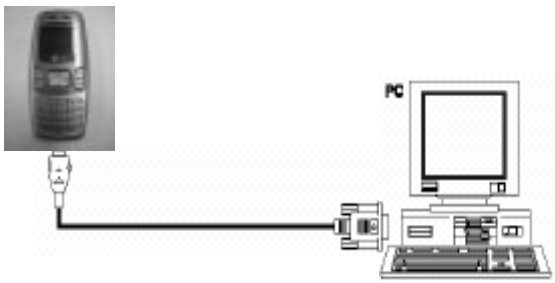

Figure 6-1 Describes Download Setup

Preparation

- Target Handset
- Data kit
- Battery
- IBM compatible PC supporting RS-232 with Windows 98 or newer

If you use data kit, you should have a battery with the voltage above 3.7V.

5.1.2 In case of using the PIF

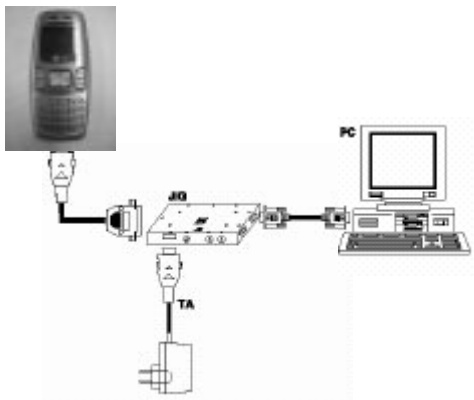

Preparation

- Target Handset
- PIF
- RS-232 Cable and PIF-to-Phone interface Cable
- TA/Power Supply or Battery
- BM compatible PC supporting RS-232 with Windows 98 or newer

If you use battery, you should have a battery with the voltage above 3.7V.

5.2 Download Procedure

5.2.1. Computer Program file -> MultiGSM.EXE Click

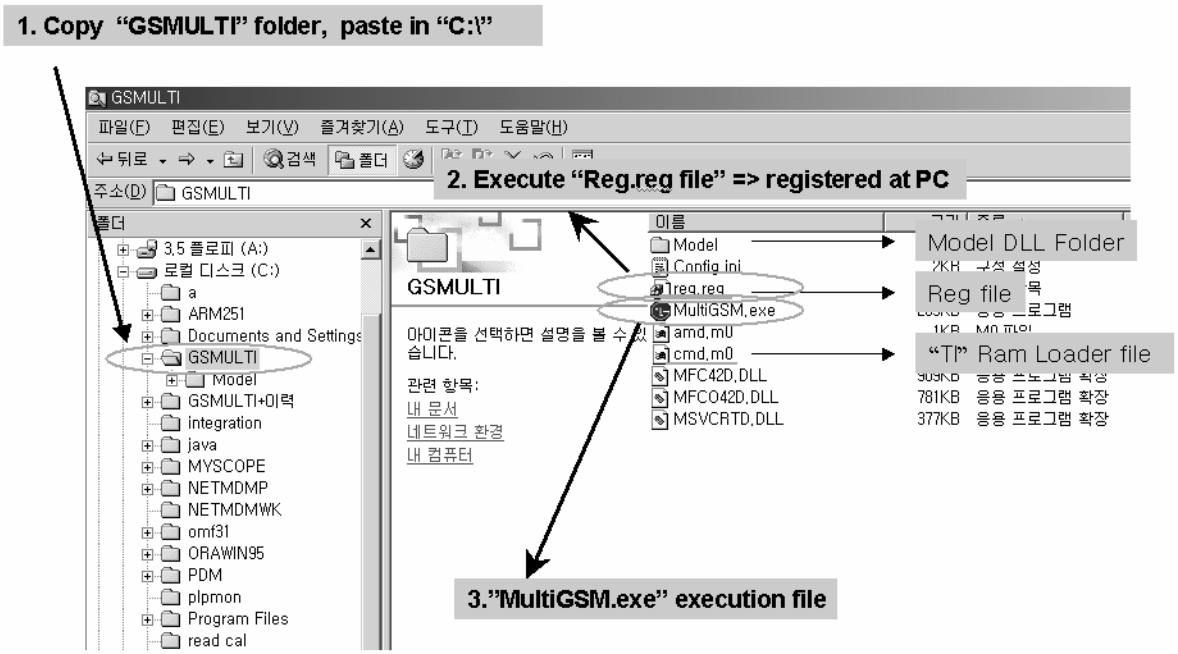

5.2.2. Click the “Setting” button.
Then, choose Configuration which is going to download.

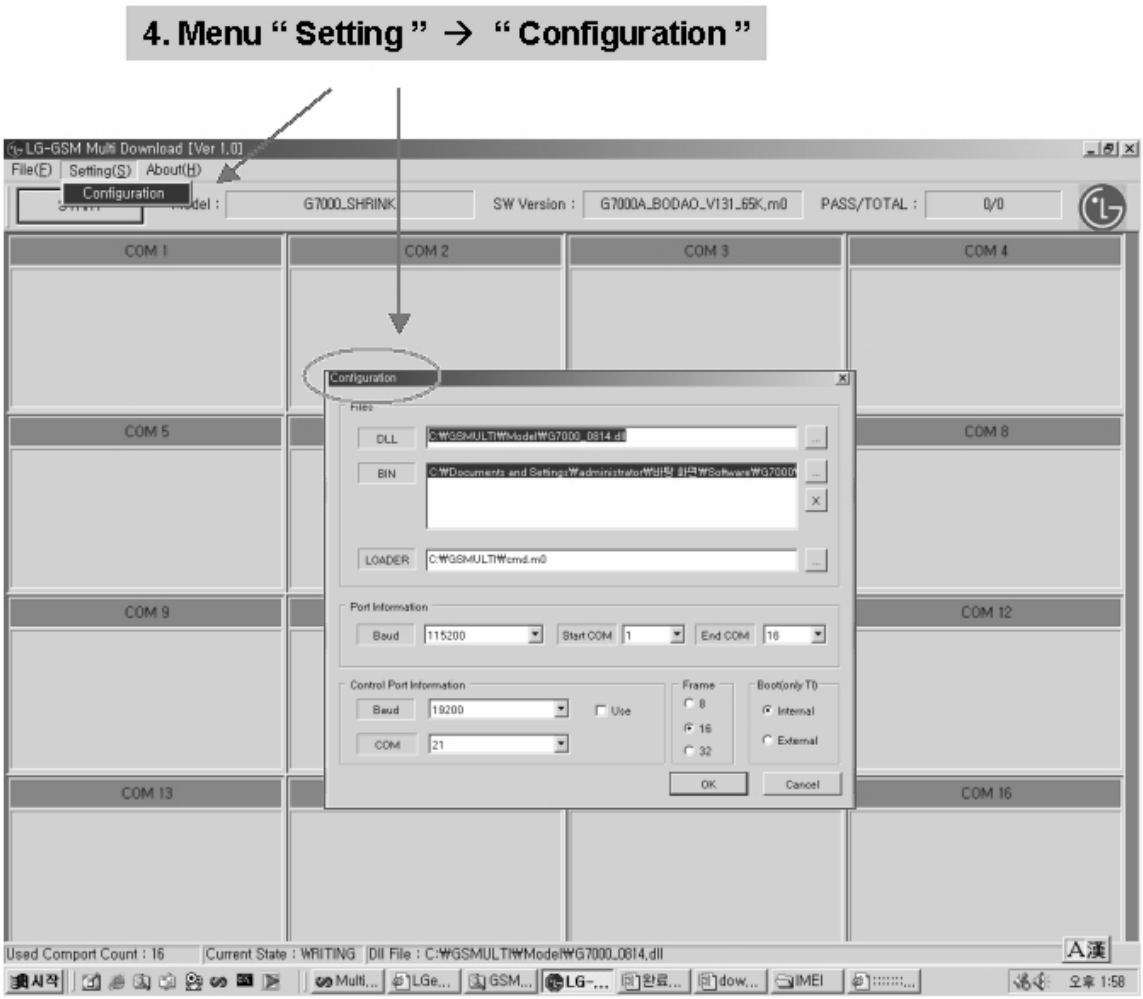

5.2.3. Configuration Setting

5. Configuration : Select values like below

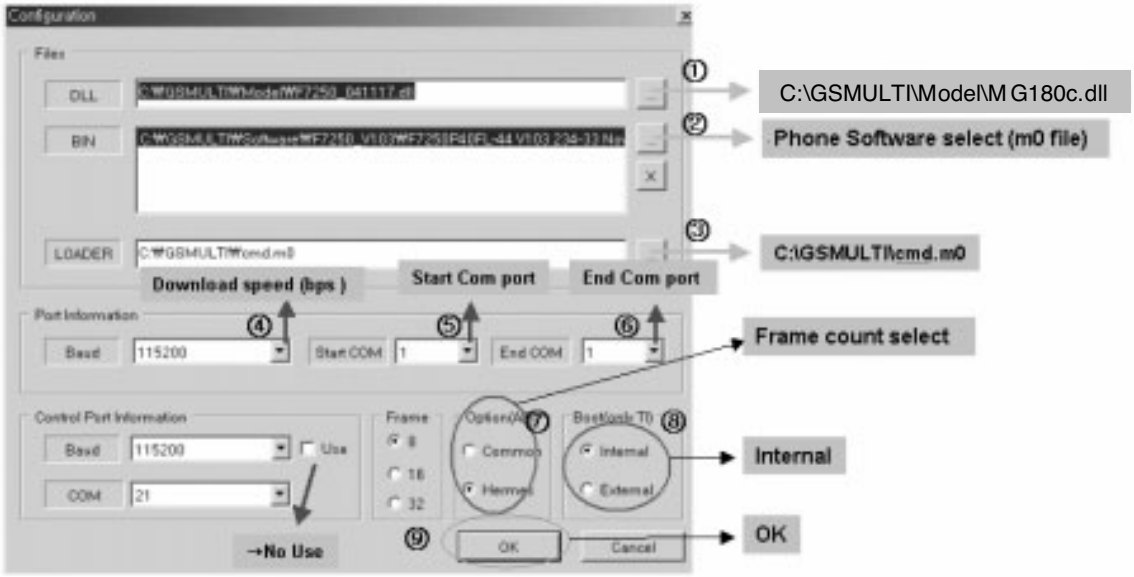

■ Download speed :TI Model →115200bps, ADI Model →460800bps
■ Start COM:1, End COM:16
■ Frame:16

→ 16port Setting
Default condition

5.2.4. Press “Start Button”.

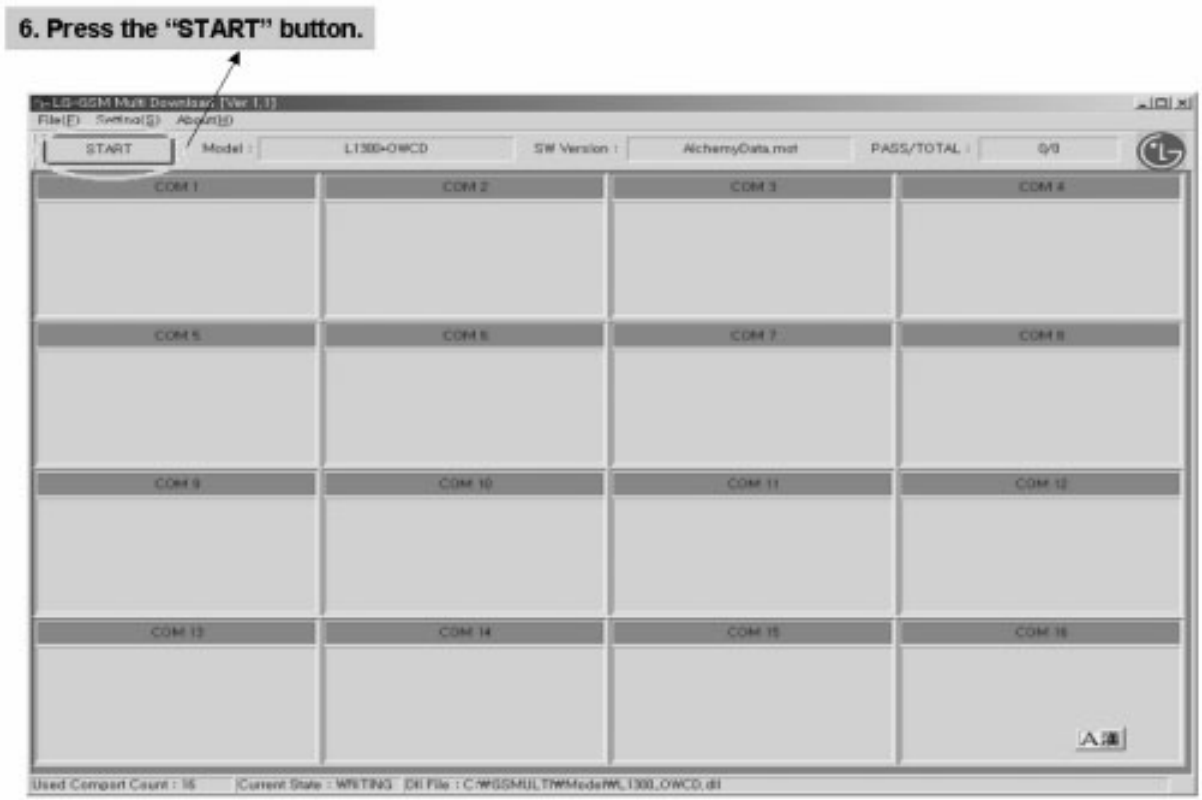

5.2.5. After “Start Button”, Which Stand-by condition

7. Stand-by Condition: “ Wait phone connecting “ is displayed → Connect the Phone.

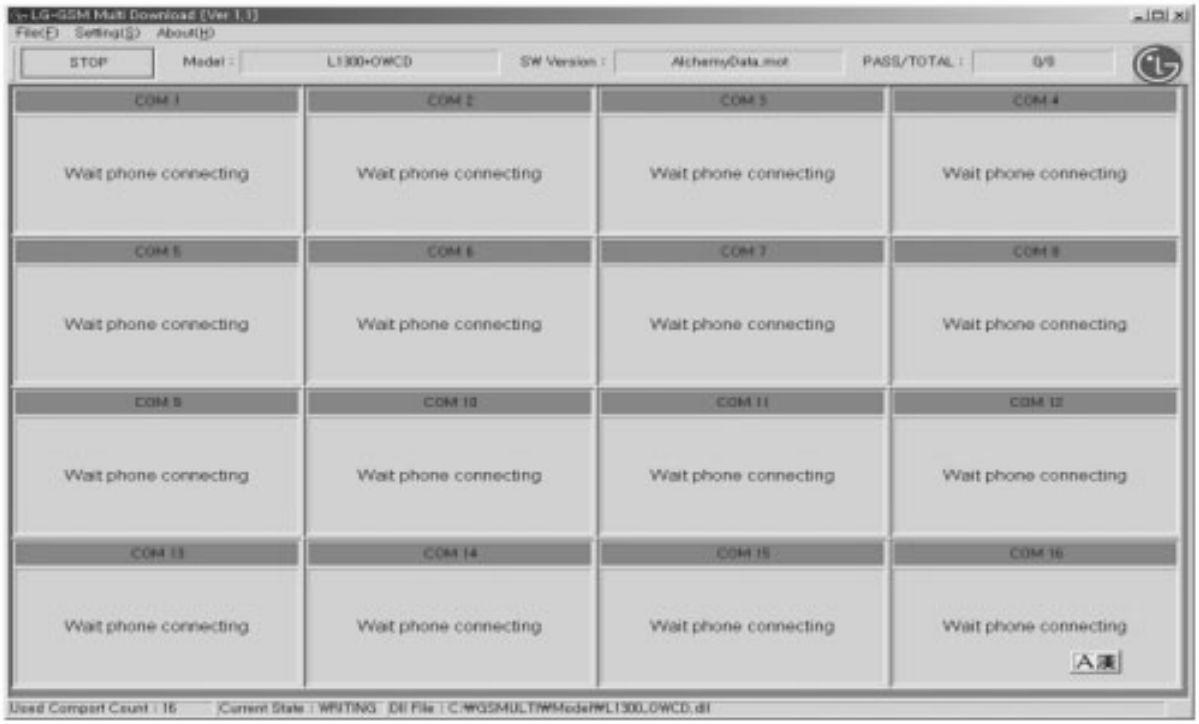

5.2.6. SW downloading Condition.

※ Downloading : Start

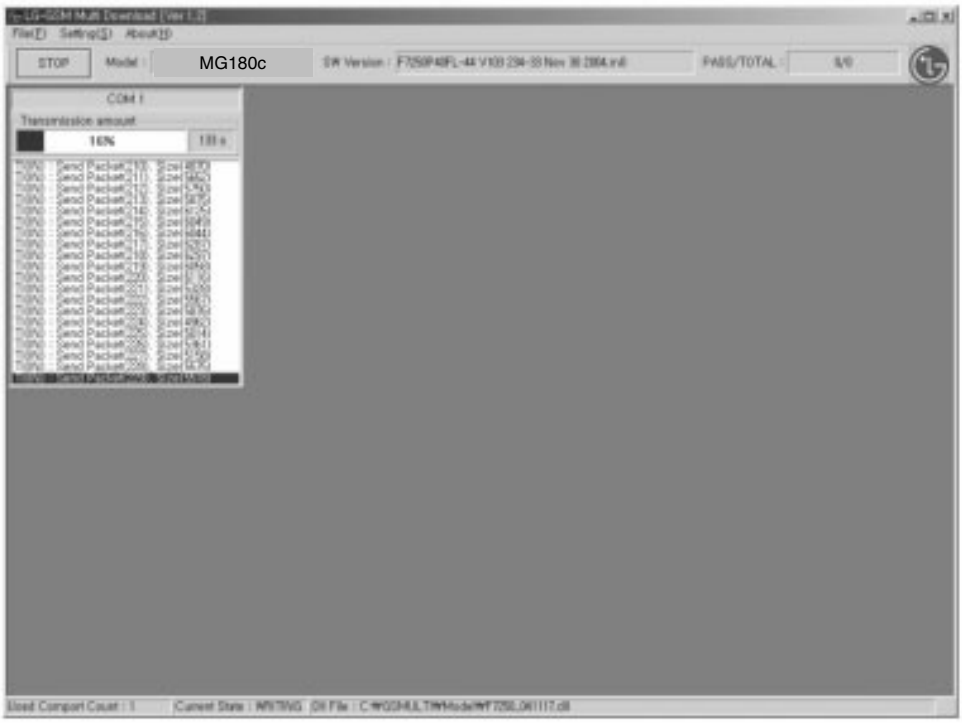

5.2.7. SW downloading END Condition.

※ Downloading : End

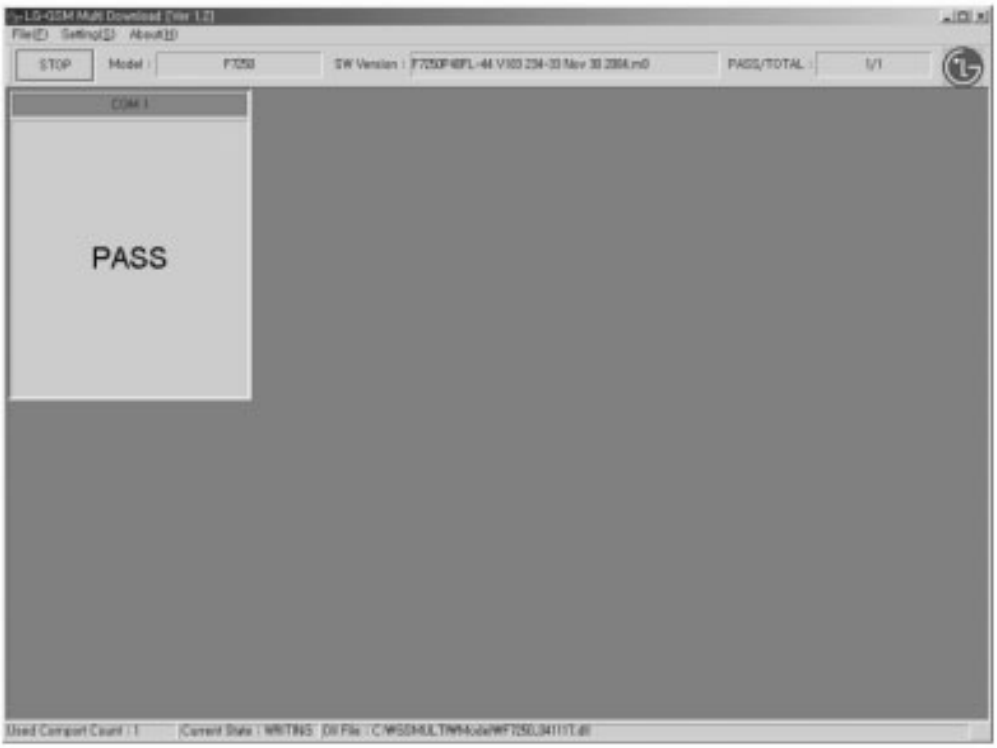

6. SERVICE AND CALIBRATION

6.1 Service S/W

6.1.1 RF Calibration Program

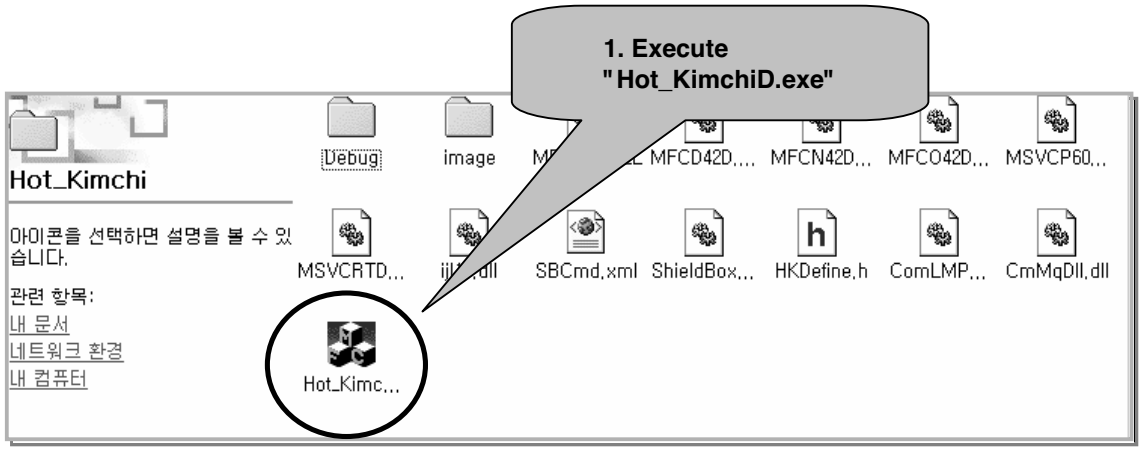

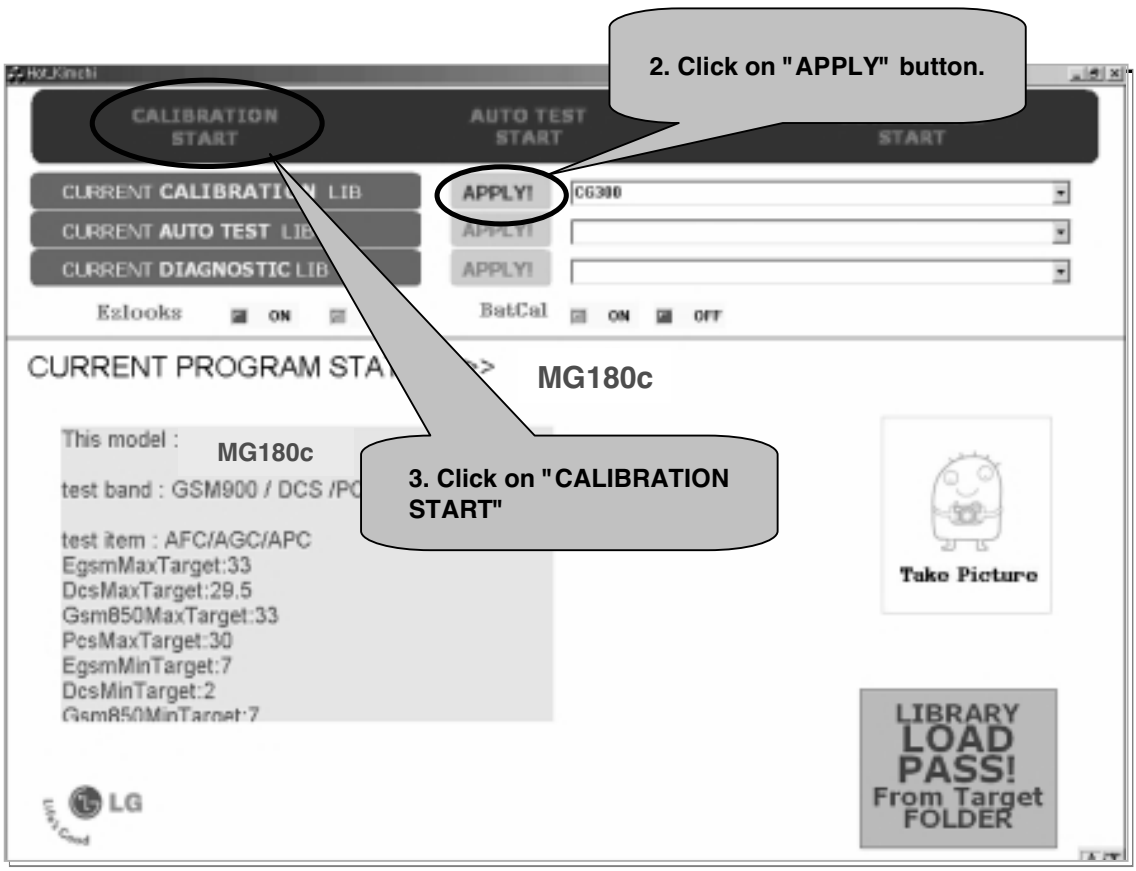

6.1.2. RF Calibration Program

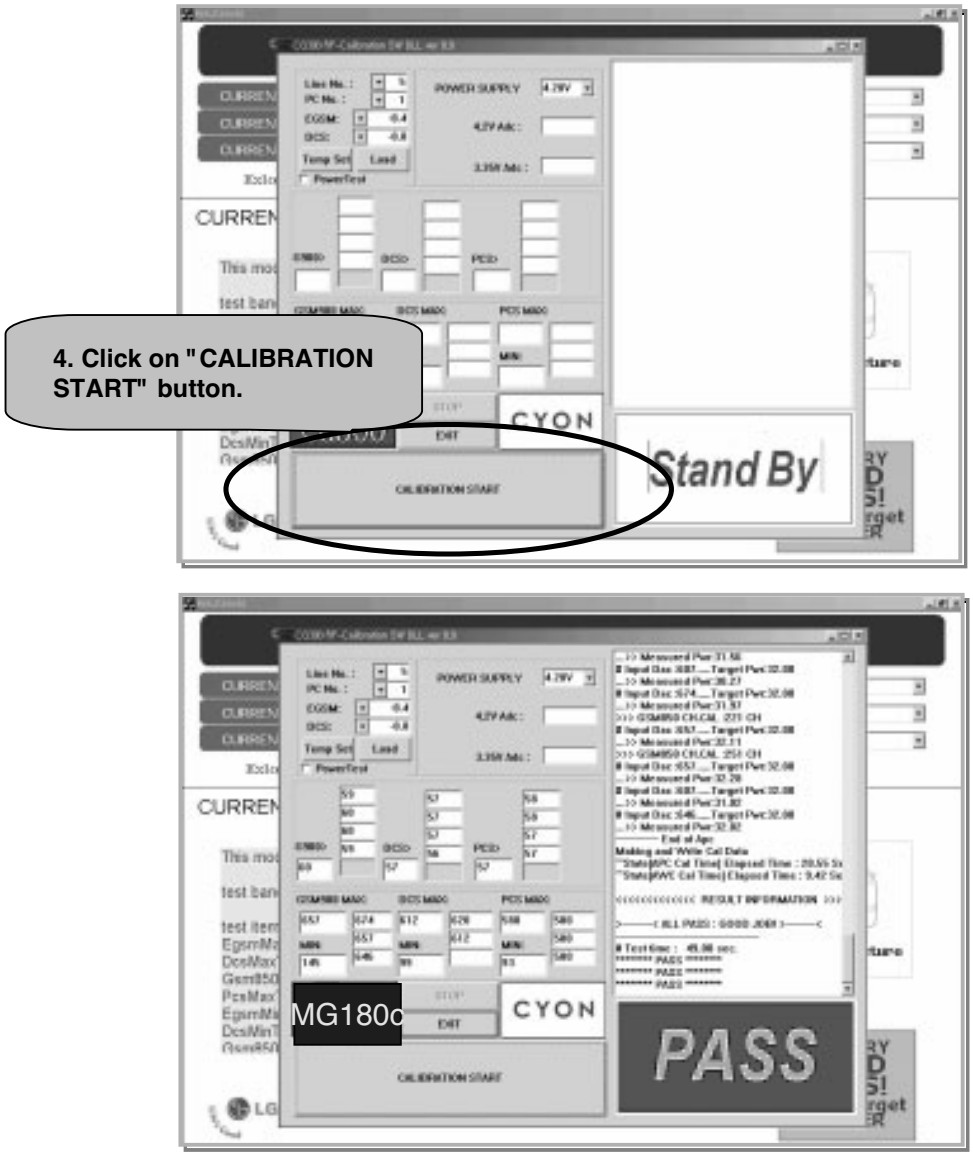

7. CIRCUIT DIAGRAM

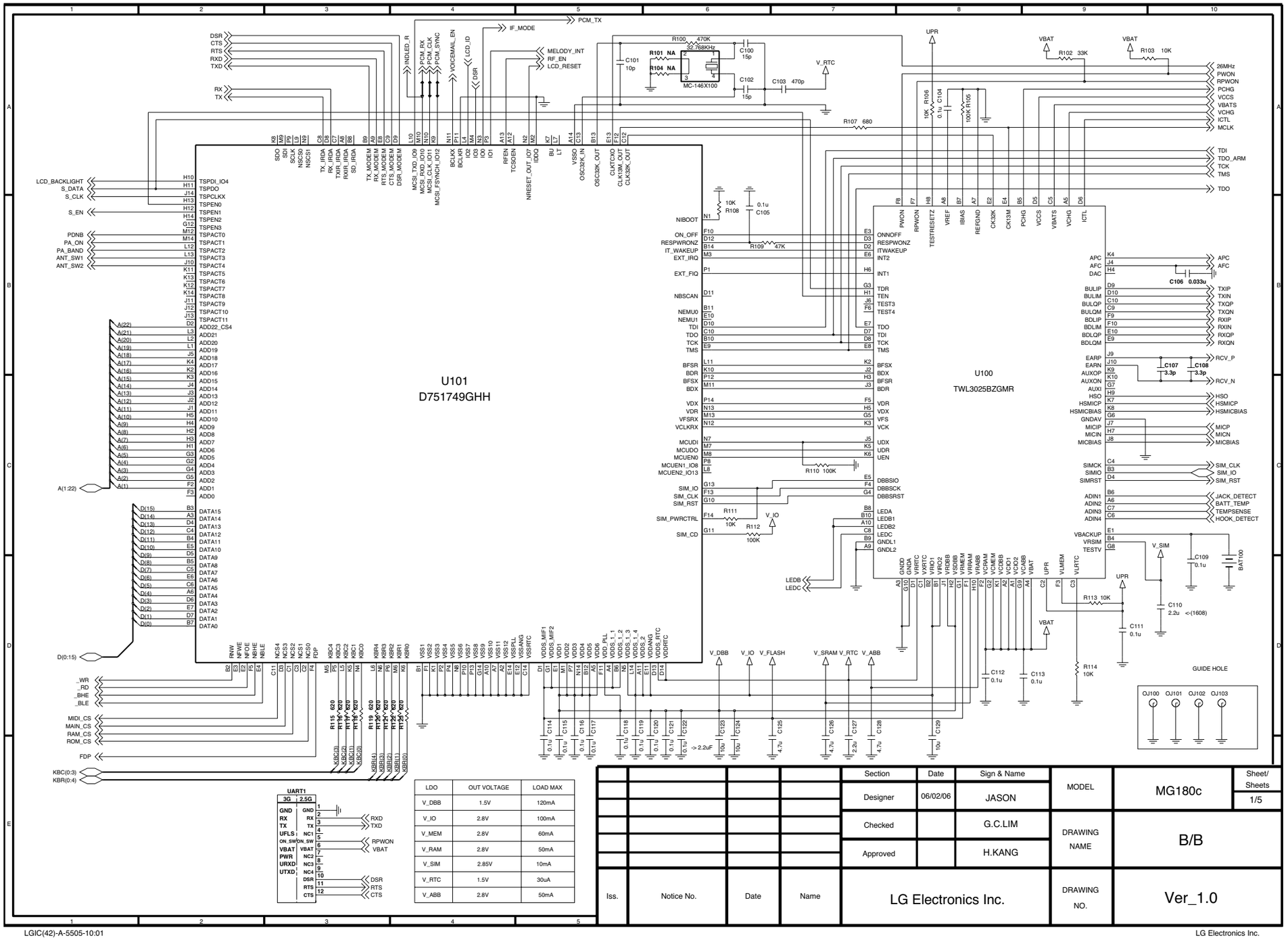

7. CIRCUIT DIAGRAM

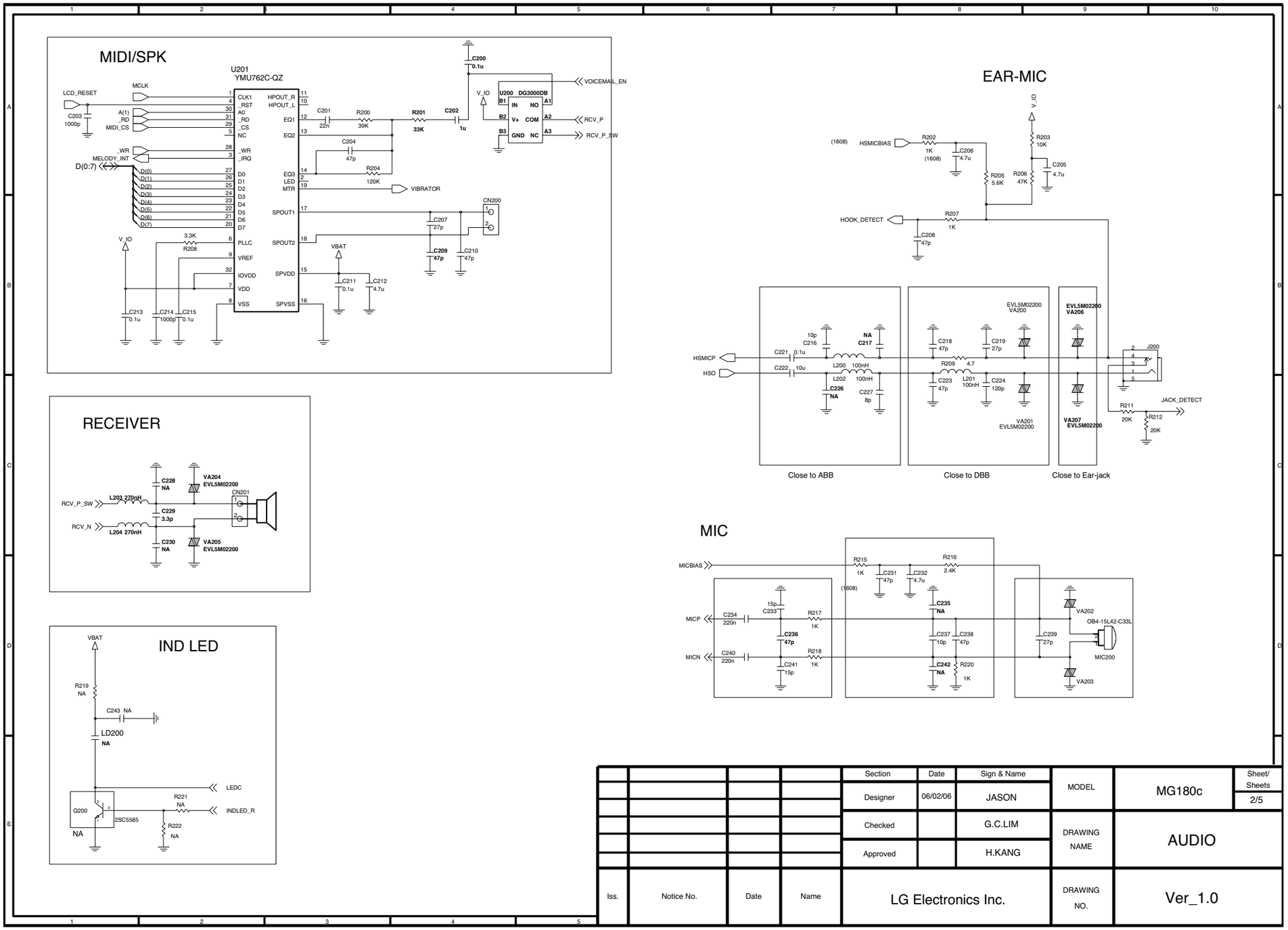

				Section	Date	Sign & Name	MODEL	MG180c	Sheet/ Sheets
				Designer	06/02/06	JASON			2/5
				Checked		G.C.LIM	DRAWING NAME	AUDIO	
				Approved		H.KANG			
Iss.	Notice No.	Date	Name	LG Electronics Inc.			DRAWING NO.	Ver_1.0	

LGIC(42)-A-5505-10:01

LG Electronics Inc.

7. CIRCUIT DIAGRAM

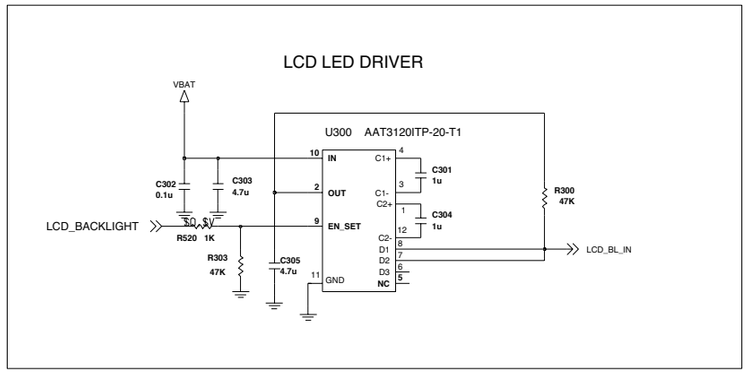

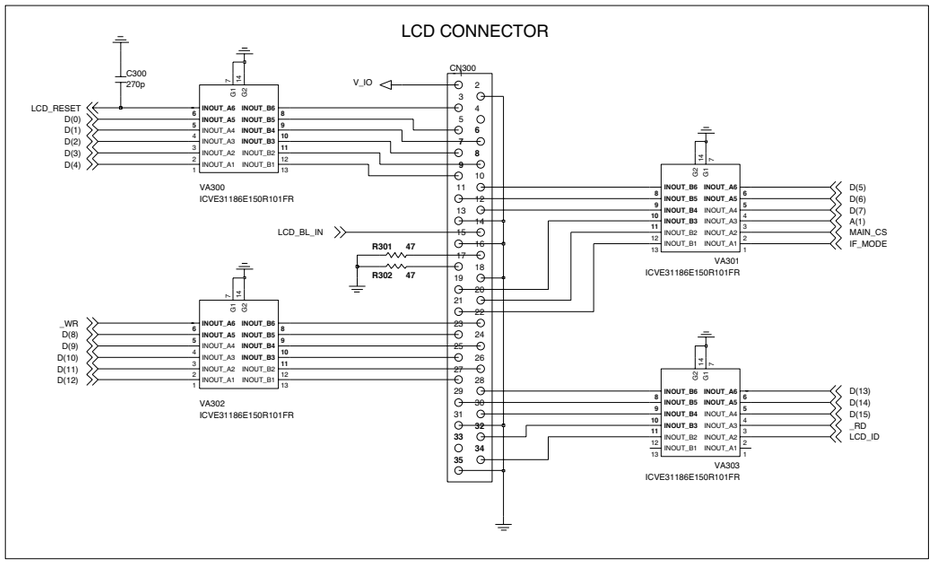

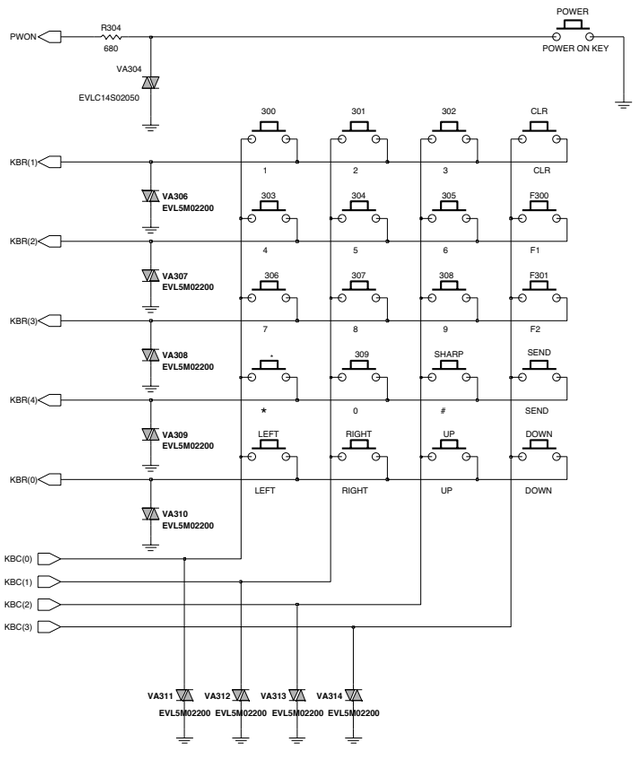

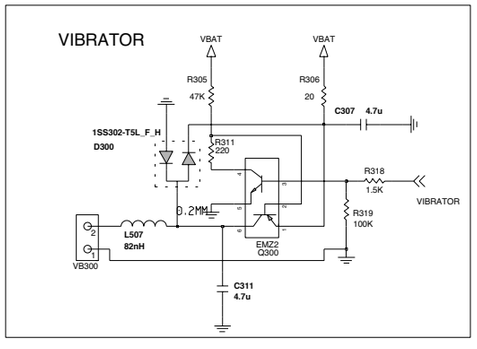

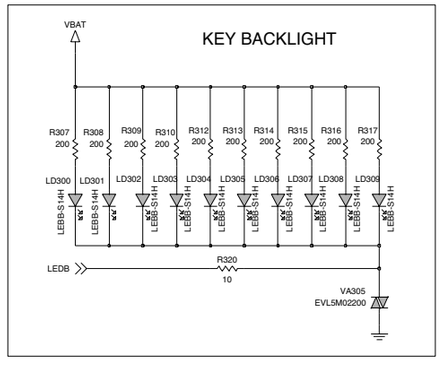

				Section	Date	Sign & Name	MODEL	MG180c	Sheet/ Sheets
				Designer	06/02/06	JASON			3/5
				Checked		G.C.LIM	DRAWING NAME	KEY/LCD	
				Approved		H.KANG			
Iss.	Notice No.	Date	Name	LG Electronics Inc.			DRAWING NO.	Ver_1.0	

7. CIRCUIT DIAGRAM

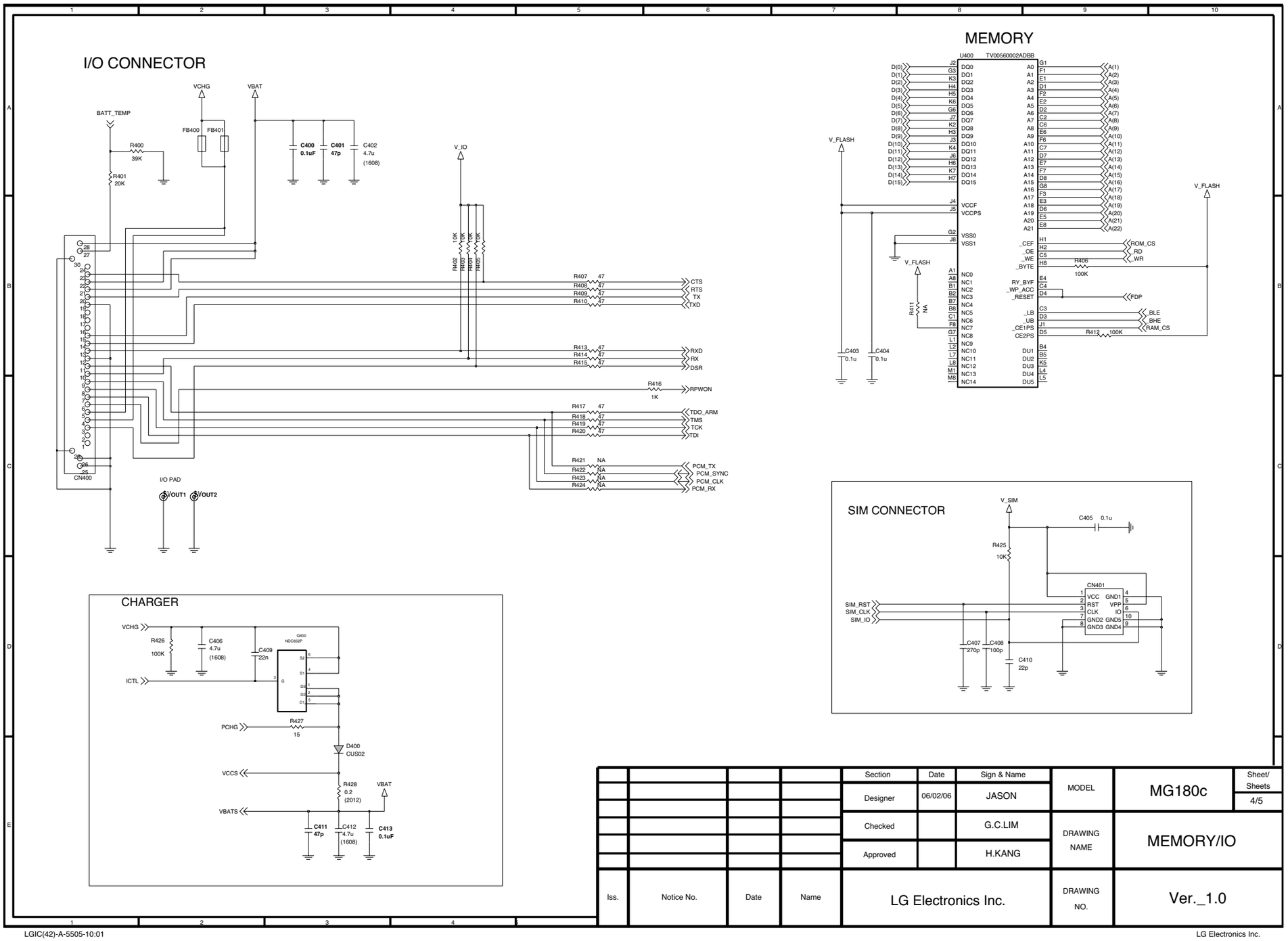

				Section	Date	Sign & Name	MODEL	MG180c	Sheet/ Sheets 4/5
				Designer	06/02/06	JASON			
				Checked		G.C.LIM	DRAWING NAME	MEMORY/IO	
				Approved		H.KANG			
Iss.	Notice No.	Date	Name	LG Electronics Inc.			DRAWING NO.	Ver._1.0	

LGIC(42)-A-5505-10:01

LG Electronics Inc.

7. CIRCUIT DIAGRAM

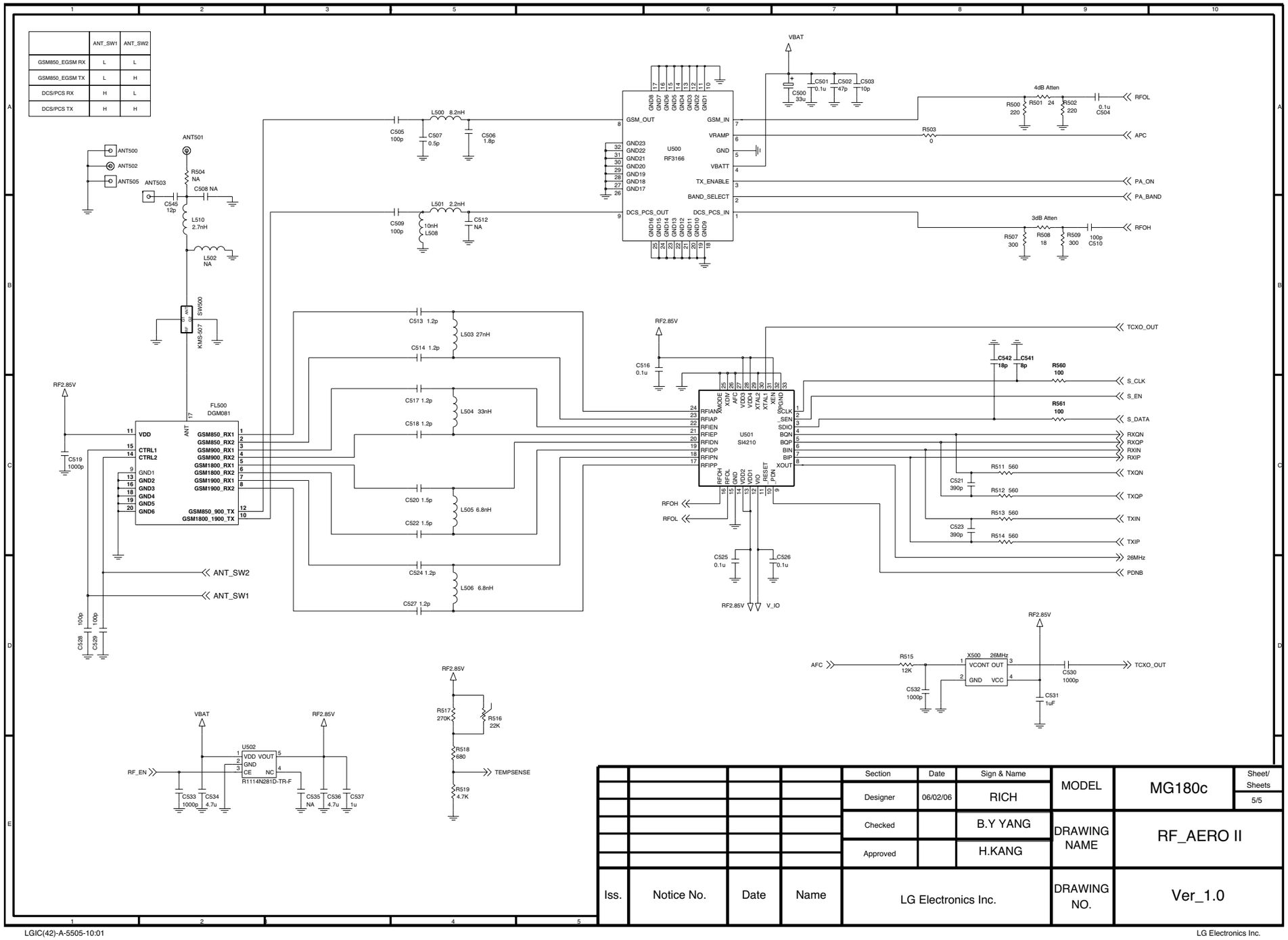

8. pcb layout

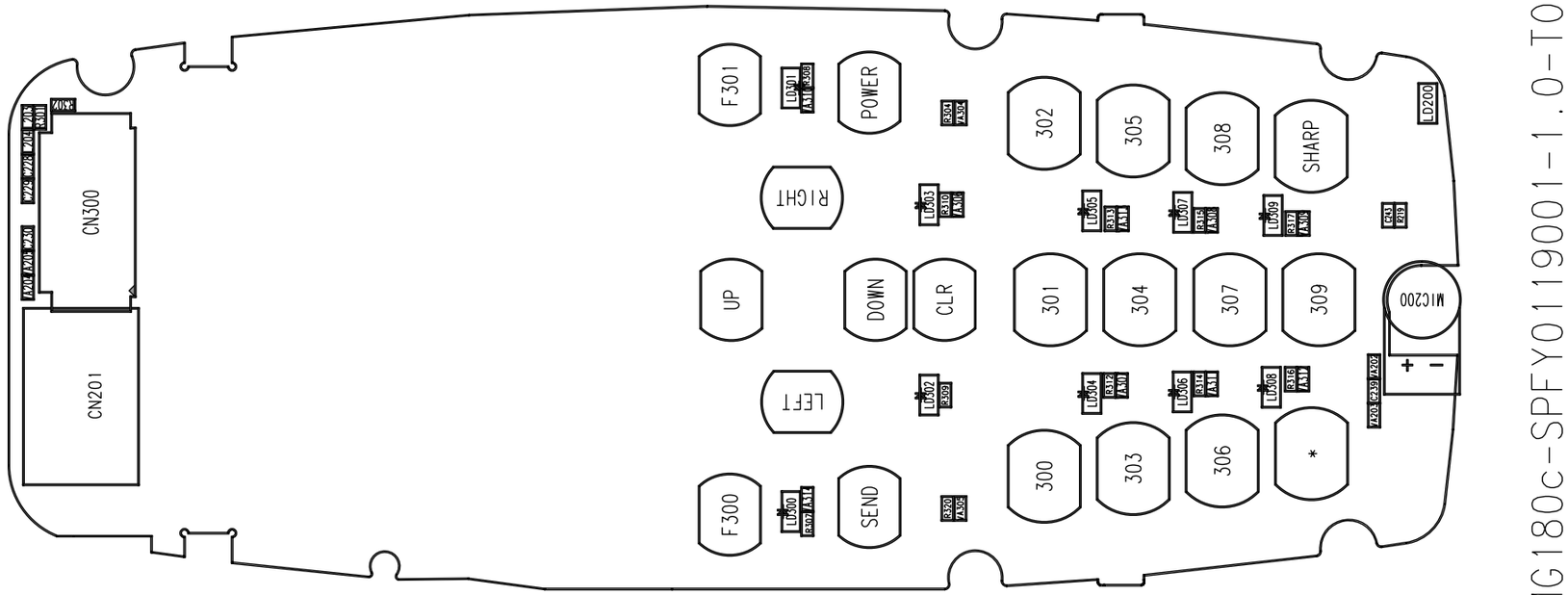
CN300
CN201
F301
POWER
302
305
308
SHARP
LD200
RIGHT
UP
DOWN
CLR
301
304
307
309
MIC200
LEFT
F300
SEND
300
303
306
*
MG180c-SPFY011900-1.0-TOP

8. pcb layout

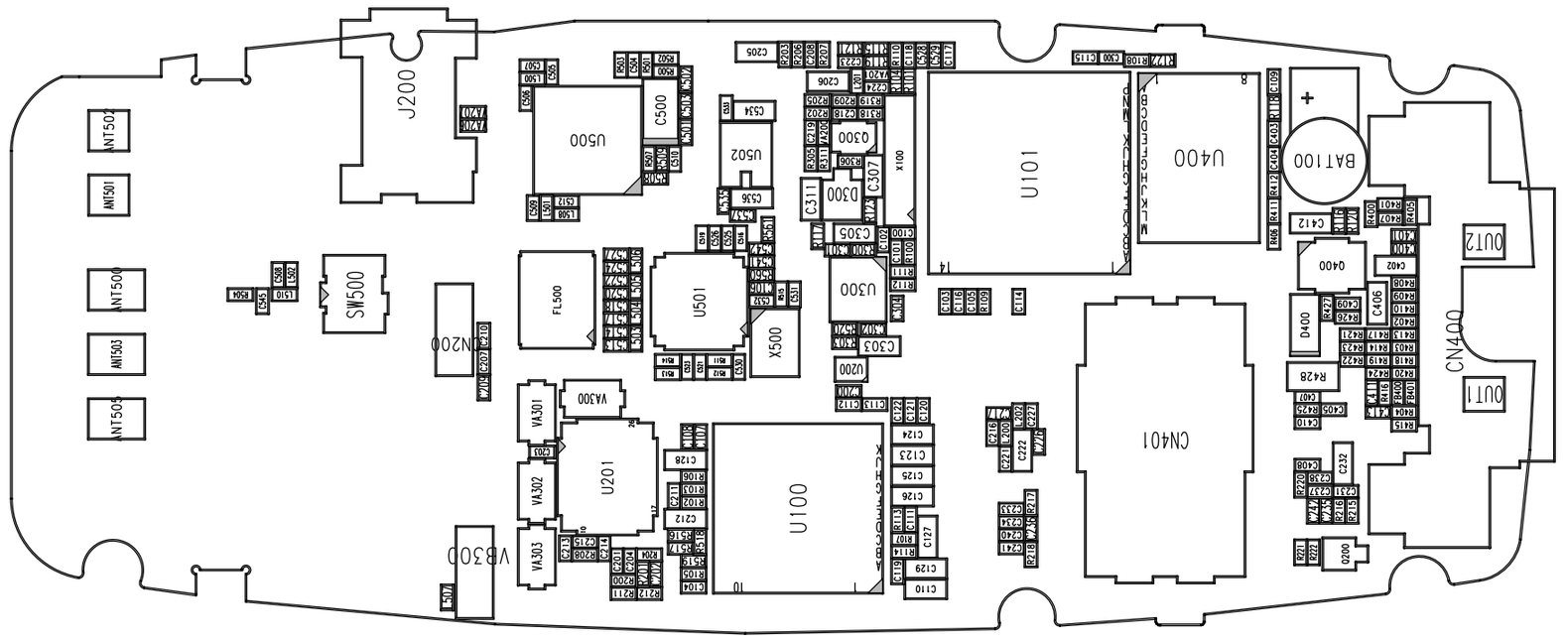

MG180c-SPFY0119001-1.0-BOT

9. ENGINEERING MODE

Engineering mode is designed to allow a service man/engineer to view and test the basic functions provided by a handset. The key sequence for switching the engineering mode on is “2945#*#” Select. Pressing END will switch back to non-engineering mode operation. Use Up and Down key to select a menu and press ‘select’ key to progress the test. Pressing ‘back key will switch back to the original test menu.

[1] All auto test

[2] Baseband test

[2-1] LED

[2-1-1] BACKLIGHT

[2-1-1-1] MAIN LCD ON/OFF

[2-1-1-2] KEYPAD ON/OFF

[2-2] LCD

[2-2-1] LCD AUTO

[2-2-2] LCD CONTRAST

[2-2-3] NBLOCKINV

[2-2-4] TEMPERATURE TABLE

[2-3] ALERT

[2-3-1] VIBRATOR

[2-3-2] RING

[2-3-3] EFFECT SOUND

[2-3-4] IMELODY SOUND

[2-3-5] VOLUME

[2-4] SERIAL PORT

[2-4-1] MODEM

[2-5] BATTERY INFO1

[2-6] AUDIO GAIN

[2-6-1] RECEIVER

[2-6-2] EAR MIC

[2-6-3] LOUD SPEAKER

[2-6-4] HANDSFREE

[2-6-5] DEFAULT VALUE

[2-6-6] SPEAKER GAIN

[2-7] BATTERY INFO1

[2-7-1] GPRS

[2-6-2] WAP

[2-6-3] Don’t care

[3] MG180c VERS

[4] ENG MODE

[4-1] CELL ENVIRON

[4-2] LOCATION INFO

[4-3] LAYER1 INFO

[4-4] WORLD PHONE

[5] CALL TIMER

[6] FACTORY DEFAULT

[7] FACTORY RESULT

10. STANDALONE TEST

10.1 Setting Method

10.1.1 COM Port

In the “Dialog Menu”, select the values as explained below.

- Port : select a correct COM port
- Baudrate : 115200
- Leave the rest as default values

10.1.2 Tx Test

1. Selecting Channel

- Select one of GSM850, PCS Band and input appropriate channel.

2. Selecting APC

a. Select either Power level or DAC value.

b. Power level

- Input appropriate value GSM (between 5~19) or PCS (between 0~15)

c. DAC value

- You may adjust directly the power level with DAC values.

10.1.3 Rx Test

1. Selecting Channel

- Select one of GSM850,, PCS Band and input appropriate channel.

2. Automatic Gain Control and Instrument Power level

See if the value of RSSI is close to -60dBm when setting the value 40 AGC Value Setting.

- Normal phone should indicate the value of RSSI close to -60dBm.

11. EXPLODED VIEW & REPLACEMENT PART LIST

11.1 EXPLODED VIEW

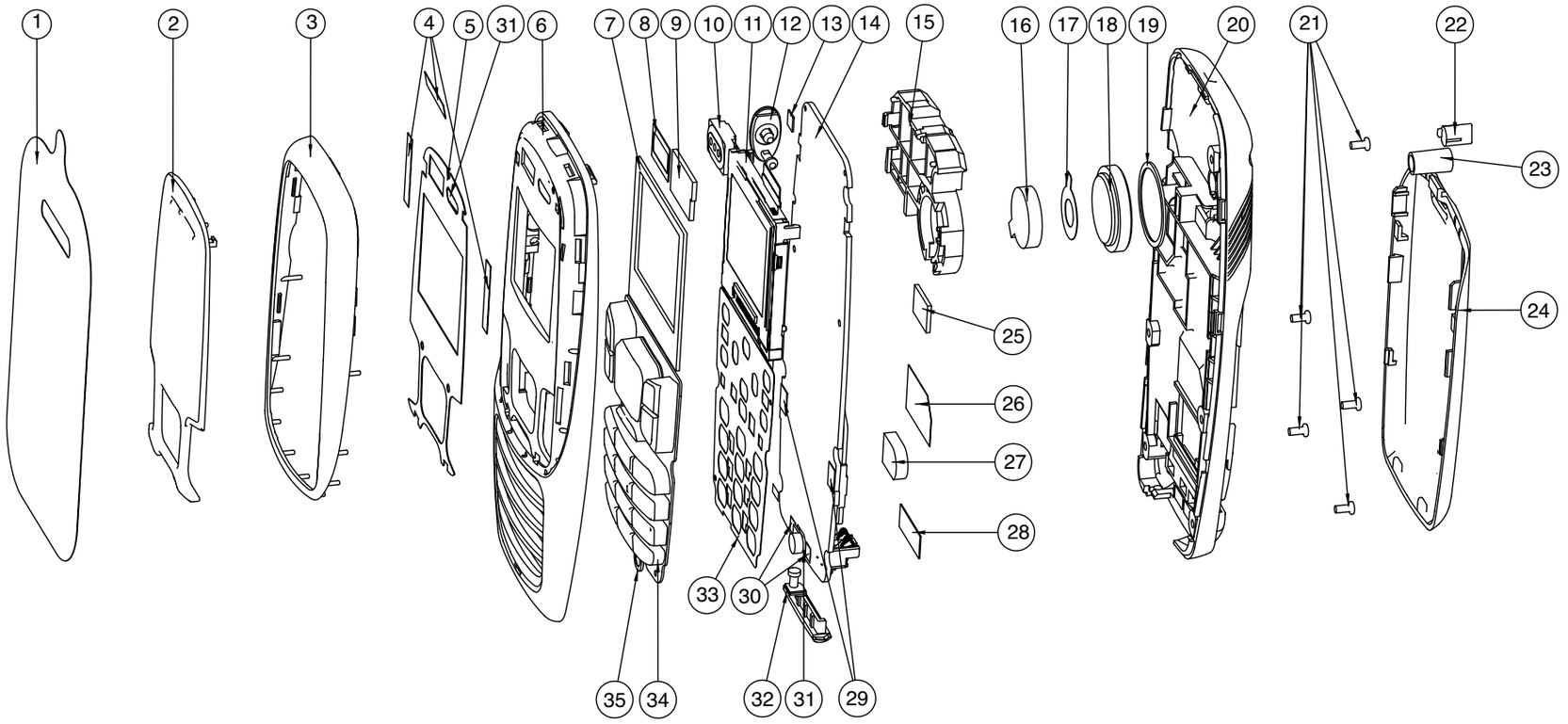

NO.	DESCRIPTION	Q'TY	DRAWING NO.	REMARK
35	FILTER, MIKE	1	MFBD0014301	
34	KEYPAD ASSY	1	AKAZ0014201	
33	DOME ASSY,METAL	1	ADCA0046401	
32	CAP,RECEPTACLE	1	MCCE0025301	
31	PAD, MIKE	1	MPBH0020501	
30	INSULATOR	2	MIDZ0093801	
29	GASKET	2	MGAZ0031401	
28	GASKET,SHIELD FORM	1	MGAD0108101	
27	PAD B/U BATTERY	1	MPBZ0132701	
26	INSULATOR	1	MIDZ0080801	
25	SHEET	1	MSAZ0038801	
24	COVER, BATTERY	1	MCJA0028801	
23	CAP,MOBILE SWITCH	1	MCCF0031801	
22	CAP,SCREW	5	MCCH0071901	
21	SCREW MACHINE,BIND	1	GMEY0009201	

NO.	DESCRIPTION	Q'TY	DRAWING NO.	REMARK
20	COVER,REAR	1	MCJN0048401	
19	FILTER,SPEAKER	1	MFBC0019401	
18	SPEAKER	1	SUSY0011701	
17	TAPE,MOTOR	1	MTAF0008301	
16	VIBRATOR,MOTOR	1	SJMY0006104	
15	ANTENNA,GSM,FIXED	1	SNGF0012701	
14	PCB ASSY,MAIN,SMT	1	SAFF0050119	
13	PAD, HOOK	1	MPBZ0131801	
12	CAP,EARPHONE JACK	1	MCCC0032101	
11	LCD MODULE	1	SVLM0016001	
10	RECEIVER	1	SURY0010301	
9	PAD, CONNECTOR	1	MPBZ0126101	
8	FILTER,RECEIVER	1	MFBB0014201	
7	PAD,LCD	1	MPBG0040801	
6	COVER,FRONT	1	MCJK0052701	
5	TAPE,WINDOW	1	MTAD0045401	
4	TAPE,DECO	3	MTAA0102701	
3	DECO,FRONT	1	MDAG0017301	
2	WINDOW, LCD	1	AWAB0021201	
1	PROTECTION,WINDOW	1	MTAB0101201	

11.2 Replacement Parts <Mechanic component>

Note: This Chapter is used for reference, Part order is ordered by SBOM standard on GCSC

Level	Location No.	Description	Part Number	Specification	Color	Remark
1		GSM,BAR/FILP	TGSM0041801		Silver	
2	AAAY00	ADDITION	AAAY0142601		Silver	
3	MCJA00	COVER,BATTERY	MCJA0028801		Silver	24
2	APEY00	PHONE	APEY0260901		Silver	
3	ACGK00	COVER ASSY,FRONT	ACGK0065001		Silver	
4	AWAB00	WINDOW ASSY,LCD	AWAB0021201		Silver	2
5	BFAA00	FILM,INMOLD	BFAA0037601		Color Unfixed	
5	MWAC00	WINDOW,LCD	MWAC0062001		Silver	
4	MCCC00	CAP,EARPHONE JACK	MCCC0032101		Silver	12
4	MCJK00	COVER,FRONT	MCJK0052701		Silver	6
5	MICA00	INSERT,FRONT	MICA0013901	2.2X4.0	Without Color	
5	MICA01	INSERT,FRONT	MICA0017201	M14xL3.0	Silver	
4	MDAG00	DECO,FRONT	MDAG0017301		Silver	3
4	MFBB00	FILTER,RECEIVER	MFBB0014201		Black	8
4	MFBD00	FILTER,MIKE	MFBD0014301		Without Color	35
4	MFBZ00	FILTER	MFBZ0002301	DUMMY	Without Color	
4	MPBG00	PAD,LCD	MPBG0040801		Black	7
4	MPBZ00	PAD	MPBZ0126101	FRONT CONNECTOR	Without Color	
4	MPBZ01	PAD	MPBZ0131801	HOOK	Without Color	13
4	MTAA00	TAPE,DECO	MTAA0102701		Without Color	4
4	MTAB00	TAPE,PROTECTION	MTAB0101201	WINDOW (FRONT)	Without Color	1
4	MTAB01	TAPE,PROTECTION	MTAB0101301	WINDOW (REAR)	Without Color	
4	MTAD00	TAPE,WINDOW	MTAD0045401		Without Color	5
4	SURY00	RECEIVER	SURY0010301	PIN ,109 dB,32 ohm,11*07 ,2.9T		10
3	ACGM00	COVER ASSY,REAR	ACGM0066301		Silver	
4	MCCE00	CAP,RECEPTACLE	MCCE0025301		Silver	32
4	MCJN00	COVER,REAR	MCJN0048401		Silver	20

11. EXPLODED VIEW & REPLACEMENT PART LIST

Level	Location No.	Description	Part Number	Specification	Color	Remark
4	MFBC00	FILTER,SPEAKER	MFBC0019401		Black	19
4	MGAD00	GASKET,SHIELD FORM	MGAD0108101	Rear (Receptacle)	Gold	28
4	MIDZ00	INSULATOR	MIDZ0080801	REAR (SIM)	Blue	26
4	MPBZ00	PAD	MPBZ0132701	B/U BATTERY	Black	27
4	MSAZ00	SHEET	MSAZ0038801	REAR	Without Color	25
3	AKAZ00	KEYPAD ASSY	AKAZ0014201		Silver	34
3	GMEY00	SCREW MACHINE,BIND	GMEY0009201	1.4 mm,3.5 mm,MSWR3(BK) ,B ,+ ,HEAD D=2.7mm	Black	21
3	MCCF00	CAP,MOBILE SWITCH	MCCF0031801		Silver	23
3	MCCH00	CAP,SCREW	MCCH0071901		Silver	22
3	MLAK00	LABEL,MODEL	MLAK0010802		Without Color	
5	ADCA00	DOME ASSY,METAL	ADCA0046401		Without Color	33
5	MGAZ00	GASKET	MGAZ0031401	PCB	Without Color	29
5	MIDZ00	INSULATOR	MIDZ0093801	PCB_BOTTOM	Transparent	30
5	MPBH00	PAD,MIKE	MPBH0020501		Black	31
5	MTAF00	TAPE,MOTOR	MTAF0008301		Without Color	17
5	MLAB00	LABEL,A/S	MLAB0000601	HUMIDITY STICKER	Without Color	
5	MLAC00	LABEL,BARCODE	MLAC0003301	EZ LOOKS(use for PCB ASSY MAIN(hardware))	Without Color	

<Main component>

Note: This Chapter is used for reference, Part order is ordered by SBOM standard on GCSC

Level	Location No.	Description	Part Number	Specification	Color	Remark
3	SAFY00	PCB ASSY,MAIN	SAFY0122520			
4	SAFB00	PCB ASSY,MAIN,INSERT	SAFB0038902			
5	SBCL00	BATTERY,CELL,LITHIUM	SBCL0001001	3 V,1.2 mAh,COIN ,MATUESHITA Backup BATTERY (ML414/F9D)		
5	SJMY00	VIBRATOR,MOTOR	SJMY0006104	3 V,0.08 A,12*2.6 ,25mm elco 8000		16
5	SNGF00	ANTENNA,GSM,FIXED	SNGF0012701	3.9 ,-3.0 dBd, ,3.9:1 ,-3.0 dBd,GSM850/DCS1800/PCS1900 INTERNAL Type Pb-Free		15
5	SUMY00	MICROPHONE	SUMY0007301	FPCB ,-42 dB,4*1.5 ,		
5	SUSY00	SPEAKER	SUSY0011701	ASSY ,8 ohm,91 dB,17 mm,3.4T		18
5	SVLM00	LCD MODULE	SVLM0016001	MAIN ,101*80 ,29*27.79 ,65k ,CSTN ,TM ,S6B33B6 ,		11
4	SAFF00	PCB ASSY,MAIN,SMT	SAFF0050119			14
5	SAFC00	PCB ASSY,MAIN,SMT BOTTOM	SAFC0045904			
6	C100	CAP,CERAMIC,CHIP	ECCH0000112	15 pF,50V,J,NP0,TC,1005,R/TP		
6	C101	CAP,CERAMIC,CHIP	ECCH0000110	10 pF,50V,D,NP0,TC,1005,R/TP		
6	C102	CAP,CERAMIC,CHIP	ECCH0000112	15 pF,50V,J,NP0,TC,1005,R/TP		
6	C103	CAP,CHIP,MAKER	ECZH0001121	470 pF,50V ,K ,X7R ,HD ,1005 ,R/TP		
6	C104	CAP,CERAMIC,CHIP	ECCH0000182	0.1 uF,10V ,K ,X5R ,HD ,1005 ,R/TP		
6	C105	CAP,CERAMIC,CHIP	ECCH0000182	0.1 uF,10V ,K ,X5R ,HD ,1005 ,R/TP		
6	C106	CAP,CERAMIC,CHIP	ECCH0000161	33 nF,16V,K,X7R,HD,1005,R/TP		
6	C107	CAP,CERAMIC,CHIP	ECCH0000180	3.3 pF,50V ,C ,NP0 ,TC ,1005 ,R/TP		
6	C108	CAP,CERAMIC,CHIP	ECCH0000180	3.3 pF,50V ,C ,NP0 ,TC ,1005 ,R/TP		
6	C109	CAP,CERAMIC,CHIP	ECCH0000182	0.1 uF,10V ,K ,X5R ,HD ,1005 ,R/TP		
6	C110	CAP,CERAMIC,CHIP	ECCH0005602	2.2 uF,16V ,K ,X5R ,HD ,1608 ,R/TP		
6	C111	CAP,CERAMIC,CHIP	ECCH0000182	0.1 uF,10V ,K ,X5R ,HD ,1005 ,R/TP		
6	C112	CAP,CERAMIC,CHIP	ECCH0000182	0.1 uF,10V ,K ,X5R ,HD ,1005 ,R/TP		
6	C113	CAP,CERAMIC,CHIP	ECCH0000182	0.1 uF,10V ,K ,X5R ,HD ,1005 ,R/TP		
6	C114	CAP,CERAMIC,CHIP	ECCH0000182	0.1 uF,10V ,K ,X5R ,HD ,1005 ,R/TP		
6	C115	CAP,CERAMIC,CHIP	ECCH0000182	0.1 uF,10V ,K ,X5R ,HD ,1005 ,R/TP		
6	C116	CAP,CERAMIC,CHIP	ECCH0000182	0.1 uF,10V ,K ,X5R ,HD ,1005 ,R/TP		
6	C117	CAP,CERAMIC,CHIP	ECCH0000182	0.1 uF,10V ,K ,X5R ,HD ,1005 ,R/TP		
6	C118	CAP,CERAMIC,CHIP	ECCH0000182	0.1 uF,10V ,K ,X5R ,HD ,1005 ,R/TP		
6	C119	CAP,CERAMIC,CHIP	ECCH0000182	0.1 uF,10V ,K ,X5R ,HD ,1005 ,R/TP		

11. EXPLODED VIEW & REPLACEMENT PART LIST

Level	Location No.	Description	Part Number	Specification	Color	Remark
6	C120	CAP,CERAMIC,CHIP	ECCH0000182	0.1 uF,10V ,K ,X5R ,HD ,1005 ,R/TP		
6	C121	CAP,CERAMIC,CHIP	ECCH0000182	0.1 uF,10V ,K ,X5R ,HD ,1005 ,R/TP		
6	C122	CAP,CERAMIC,CHIP	ECCH0000198	2.2 uF,6.3V ,M ,X5R ,TC ,1005 ,R/TP		
6	C123	CAP,CERAMIC,CHIP	ECCH0007901	10 uF,4V ,M ,X5R ,TC ,1608 ,R/TP		
6	C124	CAP,CERAMIC,CHIP	ECCH0007901	10 uF,4V ,M ,X5R ,TC ,1608 ,R/TP		
6	C125	CAP,CERAMIC,CHIP	ECCH0006201	4.7 uF,6.3V ,K ,X5R ,TC ,1608 ,R/TP		
6	C126	CAP,CERAMIC,CHIP	ECCH0006201	4.7 uF,6.3V ,K ,X5R ,TC ,1608 ,R/TP		
6	C127	CAP,CERAMIC,CHIP	ECCH0005602	2.2 uF,16V ,K ,X5R ,HD ,1608 ,R/TP		
6	C128	CAP,CERAMIC,CHIP	ECCH0006201	4.7 uF,6.3V ,K ,X5R ,TC ,1608 ,R/TP		
6	C129	CAP,CERAMIC,CHIP	ECCH0007901	10 uF,4V ,M ,X5R ,TC ,1608 ,R/TP		
6	C200	CAP,CERAMIC,CHIP	ECCH0000182	0.1 uF,10V ,K ,X5R ,HD ,1005 ,R/TP		
6	C201	CAP,CERAMIC,CHIP	ECCH0000179	22 nF,16V ,K ,X5R ,HD ,1005 ,R/TP		
6	C202	CAP,CERAMIC,CHIP	ECCH0004904	1 uF,6.3V ,K ,X5R ,TC ,1005 ,R/TP		
6	C203	CAP,CERAMIC,CHIP	ECCH0000143	1 nF,50V,K,X7R,HD,1005,R/TP		
6	C204	CAP,CERAMIC,CHIP	ECCH0000122	47 pF,50V,J,NP0,TC,1005,R/TP		
6	C205	CAP,CERAMIC,CHIP	ECCH0006201	4.7 uF,6.3V ,K ,X5R ,TC ,1608 ,R/TP		
6	C206	CAP,CERAMIC,CHIP	ECCH0006201	4.7 uF,6.3V ,K ,X5R ,TC ,1608 ,R/TP		
6	C207	CAP,CHIP,MAKER	ECZH0000826	27 pF,50V ,J ,NP0 ,TC ,1005 ,R/TP		
6	C208	CAP,CERAMIC,CHIP	ECCH0000122	47 pF,50V,J,NP0,TC,1005,R/TP		
6	C209	CAP,CERAMIC,CHIP	ECCH0000122	47 pF,50V,J,NP0,TC,1005,R/TP		
6	C210	CAP,CERAMIC,CHIP	ECCH0000122	47 pF,50V,J,NP0,TC,1005,R/TP		
6	C211	CAP,CERAMIC,CHIP	ECCH0000182	0.1 uF,10V ,K ,X5R ,HD ,1005 ,R/TP		
6	C212	CAP,CERAMIC,CHIP	ECCH0007801	4.7 uF,10V ,Z ,Y5V ,HD ,1608 ,R/TP		
6	C213	CAP,CERAMIC,CHIP	ECCH0000182	0.1 uF,10V ,K ,X5R ,HD ,1005 ,R/TP		
6	C214	CAP,CERAMIC,CHIP	ECCH0000143	1 nF,50V,K,X7R,HD,1005,R/TP		
6	C215	CAP,CERAMIC,CHIP	ECCH0000182	0.1 uF,10V ,K ,X5R ,HD ,1005 ,R/TP		
6	C216	CAP,CERAMIC,CHIP	ECCH0000110	10 pF,50V,D,NP0,TC,1005,R/TP		
6	C218	CAP,CERAMIC,CHIP	ECCH0000122	47 pF,50V,J,NP0,TC,1005,R/TP		
6	C219	CAP,CHIP,MAKER	ECZH0000826	27 pF,50V ,J ,NP0 ,TC ,1005 ,R/TP		
6	C221	CAP,CERAMIC,CHIP	ECCH0000182	0.1 uF,10V ,K ,X5R ,HD ,1005 ,R/TP		
6	C222	CAP,CERAMIC,CHIP	ECCH0007901	10 uF,4V ,M ,X5R ,TC ,1608 ,R/TP		
6	C223	CAP,CERAMIC,CHIP	ECCH0000122	47 pF,50V,J,NP0,TC,1005,R/TP		
6	C224	CAP,CERAMIC,CHIP	ECCH0000129	120 pF,50V,J,NP0,TC,1005,R/TP		
6	C227	CAP,CERAMIC,CHIP	ECCH0000109	8 pF,50V,D,NP0,TC,1005,R/TP		

Level	Location No.	Description	Part Number	Specification	Color	Remark
6	C231	CAP,CERAMIC,CHIP	ECCH0000122	47 pF,50V,J,NP0,TC,1005,R/TP		
6	C232	CAP,CERAMIC,CHIP	ECCH0006201	4.7 uF,6.3V ,K ,X5R ,TC ,1608 ,R/TP		
6	C233	CAP,CERAMIC,CHIP	ECCH0000112	15 pF,50V,J,NP0,TC,1005,R/TP		
6	C234	CAP,CHIP,MAKER	ECZH0001211	220 nF,10V ,Z ,Y5V ,HD ,1005 ,R/TP		
6	C236	CAP,CERAMIC,CHIP	ECCH0000122	47 pF,50V,J,NP0,TC,1005,R/TP		
6	C237	CAP,CERAMIC,CHIP	ECCH0000110	10 pF,50V,D,NP0,TC,1005,R/TP		
6	C238	CAP,CERAMIC,CHIP	ECCH0000122	47 pF,50V,J,NP0,TC,1005,R/TP		
6	C240	CAP,CHIP,MAKER	ECZH0001211	220 nF,10V ,Z ,Y5V ,HD ,1005 ,R/TP		
6	C241	CAP,CERAMIC,CHIP	ECCH0000112	15 pF,50V,J,NP0,TC,1005,R/TP		
6	C300	CAP,CHIP,MAKER	ECZH0001116	270 pF,50V ,K ,X7R ,HD ,1005 ,R/TP		
6	C301	CAP,CERAMIC,CHIP	ECCH0004904	1 uF,6.3V ,K ,X5R ,TC ,1005 ,R/TP		
6	C302	CAP,CERAMIC,CHIP	ECCH0000182	0.1 uF,10V ,K ,X5R ,HD ,1005 ,R/TP		
6	C303	CAP,CERAMIC,CHIP	ECCH0007801	4.7 uF,10V ,Z ,Y5V ,HD ,1608 ,R/TP		
6	C304	CAP,CERAMIC,CHIP	ECCH0004904	1 uF,6.3V ,K ,X5R ,TC ,1005 ,R/TP		
6	C305	CAP,CERAMIC,CHIP	ECCH0007801	4.7 uF,10V ,Z ,Y5V ,HD ,1608 ,R/TP		
6	C307	CAP,CERAMIC,CHIP	ECCH0007801	4.7 uF,10V ,Z ,Y5V ,HD ,1608 ,R/TP		
6	C311	CAP,CERAMIC,CHIP	ECCH0007801	4.7 uF,10V ,Z ,Y5V ,HD ,1608 ,R/TP		
6	C400	CAP,CERAMIC,CHIP	ECCH0000182	0.1 uF,10V ,K ,X5R ,HD ,1005 ,R/TP		
6	C401	CAP,CERAMIC,CHIP	ECCH0000122	47 pF,50V,J,NP0,TC,1005,R/TP		
6	C402	CAP,CERAMIC,CHIP	ECCH0007801	4.7 uF,10V ,Z ,Y5V ,HD ,1608 ,R/TP		
6	C403	CAP,CERAMIC,CHIP	ECCH0000182	0.1 uF,10V ,K ,X5R ,HD ,1005 ,R/TP		
6	C404	CAP,CERAMIC,CHIP	ECCH0000182	0.1 uF,10V ,K ,X5R ,HD ,1005 ,R/TP		
6	C405	CAP,CERAMIC,CHIP	ECCH0000182	0.1 uF,10V ,K ,X5R ,HD ,1005 ,R/TP		
6	C406	CAP,CERAMIC,CHIP	ECCH0007801	4.7 uF,10V ,Z ,Y5V ,HD ,1608 ,R/TP		
6	C407	CAP,CHIP,MAKER	ECZH0001116	270 pF,50V ,K ,X7R ,HD ,1005 ,R/TP		
6	C408	CAP,CHIP,MAKER	ECZH0000813	100 pF,50V ,J ,NP0 ,TC ,1005 ,R/TP		
6	C409	CAP,CERAMIC,CHIP	ECCH0000179	22 nF,16V ,K ,X5R ,HD ,1005 ,R/TP		
6	C410	CAP,CERAMIC,CHIP	ECCH0000115	22 pF,50V,J,NP0,TC,1005,R/TP		
6	C411	CAP,CERAMIC,CHIP	ECCH0000122	47 pF,50V,J,NP0,TC,1005,R/TP		
6	C412	CAP,CERAMIC,CHIP	ECCH0007801	4.7 uF,10V ,Z ,Y5V ,HD ,1608 ,R/TP		
6	C413	CAP,CERAMIC,CHIP	ECCH0000182	0.1 uF,10V ,K ,X5R ,HD ,1005 ,R/TP		
6	C500	CAP,TANTAL,CHIP,MAKER	ECTZ0000406	33 uF,10V ,M ,STD ,3216 ,R/TP		
6	C501	CAP,CERAMIC,CHIP	ECCH0000182	0.1 uF,10V ,K ,X5R ,HD ,1005 ,R/TP		
6	C502	CAP,CERAMIC,CHIP	ECCH0000122	47 pF,50V,J,NP0,TC,1005,R/TP		

11. EXPLODED VIEW & REPLACEMENT PART LIST

Level	Location No.	Description	Part Number	Specification	Color	Remark
6	C503	CAP,CERAMIC,CHIP	ECCH0000110	10 pF,50V,D,NP0,TC,1005,R/TP		
6	C504	CAP,CERAMIC,CHIP	ECCH0000182	0.1 uF,10V ,K ,X5R ,HD ,1005 ,R/TP		
6	C505	CAP,CHIP,MAKER	ECZH0000813	100 pF,50V ,J ,NP0 ,TC ,1005 ,R/TP		
6	C506	CAP,CERAMIC,CHIP	ECCH0000196	0.75 pF,50V ,C ,NP0 ,TC ,1005 ,R/TP		
6	C507	CAP,CERAMIC,CHIP	ECCH0000173	1.2 pF,16V ,B ,NP0 ,TC ,1005 ,R/TP		
6	C509	CAP,CHIP,MAKER	ECZH0000813	100 pF,50V ,J ,NP0 ,TC ,1005 ,R/TP		
6	C510	CAP,CHIP,MAKER	ECZH0000813	100 pF,50V ,J ,NP0 ,TC ,1005 ,R/TP		
6	C513	CAP,CERAMIC,CHIP	ECCH0000701	1.2 pF,50V ,C ,NP0 ,TC ,1005 ,R/TP		
6	C514	CAP,CERAMIC,CHIP	ECCH0000701	1.2 pF,50V ,C ,NP0 ,TC ,1005 ,R/TP		
6	C516	CAP,CERAMIC,CHIP	ECCH0000182	0.1 uF,10V ,K ,X5R ,HD ,1005 ,R/TP		
6	C517	CAP,CERAMIC,CHIP	ECCH0000173	1.2 pF,16V ,B ,NP0 ,TC ,1005 ,R/TP		
6	C518	CAP,CERAMIC,CHIP	ECCH0000173	1.2 pF,16V ,B ,NP0 ,TC ,1005 ,R/TP		
6	C519	CAP,CERAMIC,CHIP	ECCH0000143	1 nF,50V,K,X7R,HD,1005,R/TP		
6	C520	CAP,CHIP,MAKER	ECZH0000822	1.5 pF,50V ,C ,NP0 ,TC ,1005 ,R/TP		
6	C521	CAP,CERAMIC,CHIP	ECCH0000138	390 pF,50V,K,X7R,HD,1005,R/TP		
6	C522	CAP,CHIP,MAKER	ECZH0000822	1.5 pF,50V ,C ,NP0 ,TC ,1005 ,R/TP		
6	C523	CAP,CERAMIC,CHIP	ECCH0000138	390 pF,50V,K,X7R,HD,1005,R/TP		
6	C524	CAP,CERAMIC,CHIP	ECCH0000701	1.2 pF,50V ,C ,NP0 ,TC ,1005 ,R/TP		
6	C525	CAP,CERAMIC,CHIP	ECCH0000182	0.1 uF,10V ,K ,X5R ,HD ,1005 ,R/TP		
6	C526	CAP,CERAMIC,CHIP	ECCH0000182	0.1 uF,10V ,K ,X5R ,HD ,1005 ,R/TP		
6	C527	CAP,CERAMIC,CHIP	ECCH0000701	1.2 pF,50V ,C ,NP0 ,TC ,1005 ,R/TP		
6	C528	CAP,CHIP,MAKER	ECZH0000813	100 pF,50V ,J ,NP0 ,TC ,1005 ,R/TP		
6	C529	CAP,CHIP,MAKER	ECZH0000813	100 pF,50V ,J ,NP0 ,TC ,1005 ,R/TP		
6	C530	CAP,CERAMIC,CHIP	ECCH0000143	1 nF,50V,K,X7R,HD,1005,R/TP		
6	C531	CAP,CHIP,MAKER	ECZH0003202	1 uF,6.3V ,Z ,Y5V ,HD ,1005 ,R/TP		
6	C532	CAP,CERAMIC,CHIP	ECCH0000143	1 nF,50V,K,X7R,HD,1005,R/TP		
6	C533	CAP,CERAMIC,CHIP	ECCH0000143	1 nF,50V,K,X7R,HD,1005,R/TP		
6	C534	CAP,CERAMIC,CHIP	ECCH0007801	4.7 uF,10V ,Z ,Y5V ,HD ,1608 ,R/TP		
6	C536	CAP,CERAMIC,CHIP	ECCH0007801	4.7 uF,10V ,Z ,Y5V ,HD ,1608 ,R/TP		
6	C537	CAP,CERAMIC,CHIP	ECCH0004904	1 uF,6.3V ,K ,X5R ,TC ,1005 ,R/TP		
6	C541	CAP,CERAMIC,CHIP	ECCH0000109	8 pF,50V,D,NP0,TC,1005,R/TP		
6	C542	CAP,CERAMIC,CHIP	ECCH0000113	18 pF,50V,J,NP0,TC,1005,R/TP		
6	C545	CAP,CHIP,MAKER	ECZH0000816	12 pF,50V ,J ,NP0 ,TC ,1005 ,R/TP		
6	CN200	CONN,RECEPTACLE	ENEY0003801	2 PIN, , ,		

Level	Location No.	Description	Part Number	Specification	Color	Remark
6	CN400	CONNECTOR,I/O	ENRY0003501	24 PIN,0.5 mm,ANGLE , ,		
6	CN401	CONN,SOCKET	ENSY0016601	6 PIN,ETC , ,2.54 mm,H=2.5		
6	D300	DIODE,SWITCHING	EDSY0005301	SC-70 ,80 V,0.1 A,R/TP ,		
6	D400	DIODE,SWITCHING	EDSY0012101	US-FLAT ,30 V,1 A,R/TP ,2.5*1.25*0.6(t)		
6	FB400	FILTER,BEAD,CHIP	SFBH0007102	10 ohm,1005 ,Ferrite Bead		
6	FB401	FILTER,BEAD,CHIP	SFBH0007102	10 ohm,1005 ,Ferrite Bead		
6	FL500	FILTER,SEPERATOR	SFAY0006902	850.900 ,1800.1900 ,3.8 dB,4.1 dB, dB, dB,ETC ,5.4*4.0 Size Quad Band FEM		
6	J200	CONN,JACK/PLUG, EARPHONE	ENJE0002301	3,5 PIN,G7000 EAR JACK 3 pole, 5 pin KSD		
6	L200	INDUCTOR,CHIP	ELCH0005009	100 nH,J ,1005 ,R/TP ,		
6	L201	INDUCTOR,CHIP	ELCH0005009	100 nH,J ,1005 ,R/TP ,		
6	L202	INDUCTOR,CHIP	ELCH0005009	100 nH,J ,1005 ,R/TP ,		
6	L500	INDUCTOR,CHIP	ELCH0005015	6.8 nH,S ,1005 ,R/TP ,		
6	L501	INDUCTOR,CHIP	ELCH0005001	2.2 nH,S ,1005 ,R/TP ,		
6	L503	INDUCTOR,CHIP	ELCH0005005	27 nH,J ,1005 ,R/TP ,		
6	L504	INDUCTOR,CHIP	ELCH0010502	33 nH,J ,1005 ,R/TP ,Laser Cutting Type		
6	L505	INDUCTOR,CHIP	ELCH0009109	6.8 nH,J ,1005 ,R/TP ,chip coil		
6	L506	INDUCTOR,CHIP	ELCH0009109	6.8 nH,J ,1005 ,R/TP ,chip coil		
6	L507	INDUCTOR,CHIP	ELCH0001425	82 nH,J ,1005 ,R/TP ,PBFREE		
6	L508	INDUCTOR,CHIP	ELCH0001041	10 nH,S ,1005 ,R/TP ,PBFREE		
6	L510	INDUCTOR,CHIP	ELCH0005002	2.7 nH,S ,1005 ,R/TP ,		
6	Q300	TR,BJT,ARRAY	EQBA0002701	EMT6 ,150 mW,R/TP ,NPN, PNP, 150 mA		
6	Q400	TR,FET,P-CHANNEL	EQFP0003301	SOT-6 ,1.6 W,30 V,2.4 A,R/TP ,use for charge P-CHANNEL FET		
6	R100	RES,CHIP	ERHY0000292	470K ohm,1/16W,J,1005,R/TP		
6	R102	RES,CHIP	ERHY0000138	33K ohm,1/16W,F,1005,R/TP		
6	R103	RES,CHIP	ERHY0000261	10K ohm,1/16W,J,1005,R/TP		
6	R105	RES,CHIP	ERHY0000153	100K ohm,1/16W,F,1005,R/TP		
6	R106	RES,CHIP	ERHY0000261	10K ohm,1/16W,J,1005,R/TP		
6	R107	RES,CHIP	ERHY0000237	680 ohm,1/16W,J,1005,R/TP		
6	R108	RES,CHIP	ERHY0000261	10K ohm,1/16W,J,1005,R/TP		
6	R109	RES,CHIP	ERHY0000273	47K ohm,1/16W,J,1005,R/TP		
6	R110	RES,CHIP	ERHY0000153	100K ohm,1/16W,F,1005,R/TP		
6	R111	RES,CHIP	ERHY0000261	10K ohm,1/16W,J,1005,R/TP		
6	R112	RES,CHIP	ERHY0000280	100K ohm,1/16W,J,1005,R/TP		

11. EXPLODED VIEW & REPLACEMENT PART LIST

Level	Location No.	Description	Part Number	Specification	Color	Remark
6	R113	RES,CHIP	ERHY0000261	10K ohm,1/16W,J,1005,R/TP		
6	R114	RES,CHIP	ERHY0000261	10K ohm,1/16W,J,1005,R/TP		
6	R115	RES,CHIP	ERHY0000236	620 ohm,1/16W,J,1005,R/TP		
6	R116	RES,CHIP	ERHY0000236	620 ohm,1/16W,J,1005,R/TP		
6	R117	RES,CHIP	ERHY0000236	620 ohm,1/16W,J,1005,R/TP		
6	R118	RES,CHIP	ERHY0000236	620 ohm,1/16W,J,1005,R/TP		
6	R119	RES,CHIP	ERHY0000236	620 ohm,1/16W,J,1005,R/TP		
6	R120	RES,CHIP	ERHY0000236	620 ohm,1/16W,J,1005,R/TP		
6	R121	RES,CHIP	ERHY0000236	620 ohm,1/16W,J,1005,R/TP		
6	R122	RES,CHIP	ERHY0000236	620 ohm,1/16W,J,1005,R/TP		
6	R123	RES,CHIP	ERHY0000236	620 ohm,1/16W,J,1005,R/TP		
6	R200	RES,CHIP	ERHY0000271	39K ohm,1/16W,J,1005,R/TP		
6	R201	RES,CHIP	ERHY0000138	33K ohm,1/16W,F,1005,R/TP		
6	R202	RES,CHIP	ERHY0000241	1K ohm,1/16W,J,1005,R/TP		
6	R203	RES,CHIP	ERHY0000261	10K ohm,1/16W,J,1005,R/TP		
6	R204	RES,CHIP	ERHY0000282	120K ohm,1/16W,J,1005,R/TP		
6	R205	RES,CHIP	ERHY0000255	5.6K ohm,1/16W,J,1005,R/TP		
6	R206	RES,CHIP	ERHY0000273	47K ohm,1/16W,J,1005,R/TP		
6	R207	RES,CHIP	ERHY0000241	1K ohm,1/16W,J,1005,R/TP		
6	R208	RES,CHIP	ERHY0000250	3.3K ohm,1/16W,J,1005,R/TP		
6	R209	RES,CHIP	ERHY0000202	4.7 ohm,1/16W,J,1005,R/TP		
6	R211	RES,CHIP	ERHY0000265	20K ohm,1/16W,J,1005,R/TP		
6	R212	RES,CHIP	ERHY0000265	20K ohm,1/16W,J,1005,R/TP		
6	R215	RES,CHIP	ERHY0000241	1K ohm,1/16W,J,1005,R/TP		
6	R216	RES,CHIP	ERHY0000248	2.4K ohm,1/16W,J,1005,R/TP		
6	R217	RES,CHIP	ERHY0000241	1K ohm,1/16W,J,1005,R/TP		
6	R218	RES,CHIP	ERHY0000241	1K ohm,1/16W,J,1005,R/TP		
6	R220	RES,CHIP	ERHY0000241	1K ohm,1/16W,J,1005,R/TP		
6	R300	RES,CHIP	ERHY0000273	47K ohm,1/16W,J,1005,R/TP		
6	R303	RES,CHIP	ERHY0000273	47K ohm,1/16W,J,1005,R/TP		
6	R305	RES,CHIP	ERHY0000273	47K ohm,1/16W,J,1005,R/TP		
6	R306	RES,CHIP	ERHY0000207	20 ohm,1/16W,J,1005,R/TP		
6	R311	RES,CHIP	ERHY0000226	220 ohm,1/16W,J,1005,R/TP		
6	R318	RES,CHIP	ERHY0000244	1.5K ohm,1/16W,J,1005,R/TP		

Level	Location No.	Description	Part Number	Specification	Color	Remark
6	R319	RES,CHIP	ERHY0000280	100K ohm,1/16W,J,1005,R/TP		
6	R400	RES,CHIP	ERHY0000271	39K ohm,1/16W,J,1005,R/TP		
6	R401	RES,CHIP	ERHY0000265	20K ohm,1/16W,J,1005,R/TP		
6	R402	RES,CHIP	ERHY0000261	10K ohm,1/16W,J,1005,R/TP		
6	R403	RES,CHIP	ERHY0000261	10K ohm,1/16W,J,1005,R/TP		
6	R404	RES,CHIP	ERHY0000261	10K ohm,1/16W,J,1005,R/TP		
6	R405	RES,CHIP	ERHY0000261	10K ohm,1/16W,J,1005,R/TP		
6	R406	RES,CHIP	ERHY0000280	100K ohm,1/16W,J,1005,R/TP		
6	R407	RES,CHIP	ERHY0000213	47 ohm,1/16W,J,1005,R/TP		
6	R408	RES,CHIP	ERHY0000213	47 ohm,1/16W,J,1005,R/TP		
6	R409	RES,CHIP	ERHY0000213	47 ohm,1/16W,J,1005,R/TP		
6	R410	RES,CHIP	ERHY0000213	47 ohm,1/16W,J,1005,R/TP		
6	R412	RES,CHIP	ERHY0000280	100K ohm,1/16W,J,1005,R/TP		
6	R413	RES,CHIP	ERHY0000213	47 ohm,1/16W,J,1005,R/TP		
6	R414	RES,CHIP	ERHY0000213	47 ohm,1/16W,J,1005,R/TP		
6	R415	RES,CHIP	ERHY0000213	47 ohm,1/16W,J,1005,R/TP		
6	R416	RES,CHIP	ERHY0000241	1K ohm,1/16W,J,1005,R/TP		
6	R417	RES,CHIP	ERHY0000213	47 ohm,1/16W,J,1005,R/TP		
6	R418	RES,CHIP	ERHY0000213	47 ohm,1/16W,J,1005,R/TP		
6	R419	RES,CHIP	ERHY0000213	47 ohm,1/16W,J,1005,R/TP		
6	R420	RES,CHIP	ERHY0000213	47 ohm,1/16W,J,1005,R/TP		
6	R425	RES,CHIP	ERHY0000261	10K ohm,1/16W,J,1005,R/TP		
6	R426	RES,CHIP	ERHY0000280	100K ohm,1/16W,J,1005,R/TP		
6	R427	RES,CHIP	ERHY0000205	15 ohm,1/16W,J,1005,R/TP		
6	R428	RES,CHIP	ERHY0001102	0.2 ohm,1/4W ,F ,2012 ,R/TP		
6	R500	RES,CHIP	ERHY0000226	220 ohm,1/16W,J,1005,R/TP		
6	R501	RES,CHIP	ERHY0008201	24 ohm,1/16W ,J ,1005 ,R/TP		
6	R502	RES,CHIP	ERHY0000226	220 ohm,1/16W,J,1005,R/TP		
6	R503	RES,CHIP	ERHY0000201	0 ohm,1/16W,J,1005,R/TP		
6	R507	RES,CHIP	ERHY0000229	300 ohm,1/16W,J,1005,R/TP		
6	R508	RES,CHIP	ERHY0000206	18 ohm,1/16W,J,1005,R/TP		
6	R509	RES,CHIP	ERHY0000229	300 ohm,1/16W,J,1005,R/TP		
6	R511	RES,CHIP	ERHY0000235	560 ohm,1/16W,J,1005,R/TP		
6	R512	RES,CHIP	ERHY0000235	560 ohm,1/16W,J,1005,R/TP		

11. EXPLODED VIEW & REPLACEMENT PART LIST

Level	Location No.	Description	Part Number	Specification	Color	Remark
6	R513	RES,CHIP	ERHY0000235	560 ohm,1/16W,J,1005,R/TP		
6	R514	RES,CHIP	ERHY0000235	560 ohm,1/16W,J,1005,R/TP		
6	R515	RES,CHIP	ERHY0000262	12K ohm,1/16W,J,1005,R/TP		
6	R516	THERMISTOR	SETY0006501	NTC ,22000 ohm,SMD ,1005, ECTH 1005 Series, Pb Free		
6	R517	RES,CHIP	ERHY0000289	270K ohm,1/16W,J,1005,R/TP		
6	R518	RES,CHIP	ERHY0000237	680 ohm,1/16W,J,1005,R/TP		
6	R519	RES,CHIP	ERHY0000254	4.7K ohm,1/16W,J,1005,R/TP		
6	R520	RES,CHIP	ERHY0000241	1K ohm,1/16W,J,1005,R/TP		
6	R560	RES,CHIP	ERHY0000220	100 ohm,1/16W,J,1005,R/TP		
6	R561	RES,CHIP	ERHY0000220	100 ohm,1/16W,J,1005,R/TP		
6	SW500	CONN,RF SWITCH	ENWY0003301	,SMD ,0.4 dB,		
6	U100	IC	EUSY0243001	BGA ,100 PIN,R/TP ,ABB(IOTA Shrink), Pb Free		
6	U101	IC	EUSY0251801	BGA ,179 PIN,R/TP ,Calypso Lite DBB		
6	U200	IC	EUSY0159101	MICRO FOOT(6 BUMP) ,6 PIN,R/TP ,SPDT ANALOG SWITCH		
6	U201	IC	EUSY0293701	MIDI IC, 40poly(SMAF 16poly) ,32 PIN,R/TP ,MA2 MONO		
6	U300	IC	EUSY0253601	TSSPJW12 ,12 PIN,R/TP ,BACKLIGHT CHARGE PUMP20mAX3		
6	U400	IC	EUSY0250702	TLC-056 / FBGA ,56 PIN,ETC ,64M NOR+32M PSRAM / SAMSUNG UTRAM / PB FREE		
6	U500	PAM	SMPY0008901	35 dBm,55 %,2 A,-50 dBc,25 dB,6.0 * 6.0 * 1.4 ,SMD ,GSM QUAD PAM		
6	U501	IC	EUSY0223201	5.0*5.0 ,32 PIN,R/TP ,AERO11 TRANSCEIVER		
6	U502	IC	EUSY0232802	sot 23-5 ,5 PIN,R/TP ,2.8V,150mA LDO		
6	VA200	VARISTOR	SEVY0003901	5.5 V, ,SMD ,480pF, 1005		
6	VA201	VARISTOR	SEVY0003901	5.5 V, ,SMD ,480pF, 1005		
6	VA206	VARISTOR	SEVY0003901	5.5 V, ,SMD ,480pF, 1005		
6	VA207	VARISTOR	SEVY0003901	5.5 V, ,SMD ,480pF, 1005		
6	VA300	VARISTOR	SEVY0007001	18 V,- ,SMD ,6ch, 100ohm, EMI Filter Array chip varistor		
6	VA301	VARISTOR	SEVY0007001	18 V,- ,SMD ,6ch, 100ohm, EMI Filter Array chip varistor		
6	VA302	VARISTOR	SEVY0007001	18 V,- ,SMD ,6ch, 100ohm, EMI Filter Array chip varistor		
6	VA303	VARISTOR	SEVY0007001	18 V,- ,SMD ,6ch, 100ohm, EMI Filter Array chip varistor		
6	VB300	CONN,RECEPTACLE	ENEY0003801	2 PIN, , ,		
6	X100	X-TAL	EXXY0015601	.032768 MHz,20 PPM,7 pF,65000 ohm,SMD ,6.9*1.4*1.3 ,		

Level	Location No.	Description	Part Number	Specification	Color	Remark
6	X500	VCTCXO	EXSK0005601	26 MHz,2 PPM,10 pF,SMD ,3.2*2.5*1.0 ,		
5	SAFD00	PCB ASSY,MAIN,SMT TOP	SAFD0044503			
6	C229	CAP,CERAMIC,CHIP	ECCH0000180	3.3 pF,50V ,C ,NP0 ,TC ,1005 ,R/TP		
6	C239	CAP,CHIP,MAKER	ECZH0000826	27 pF,50V ,J ,NP0 ,TC ,1005 ,R/TP		
6	CN300	CONNECTOR,FFC/FPC	ENQY0010901	35 PIN,0.3 mm,ETC , ,H=1.2		
6	L203	INDUCTOR,CHIP	ELCH0010402	270 nH,M ,1005 ,R/TP ,CHIP		
6	L204	INDUCTOR,CHIP	ELCH0010402	270 nH,M ,1005 ,R/TP ,CHIP		
6	LD300	DIODE,LED,CHIP	EDLH0006001	Blue ,1608 ,R/TP ,Blue SMD LED		
6	LD301	DIODE,LED,CHIP	EDLH0006001	Blue ,1608 ,R/TP ,Blue SMD LED		
6	LD302	DIODE,LED,CHIP	EDLH0006001	Blue ,1608 ,R/TP ,Blue SMD LED		
6	LD303	DIODE,LED,CHIP	EDLH0006001	Blue ,1608 ,R/TP ,Blue SMD LED		
6	LD304	DIODE,LED,CHIP	EDLH0006001	Blue ,1608 ,R/TP ,Blue SMD LED		
6	LD305	DIODE,LED,CHIP	EDLH0006001	Blue ,1608 ,R/TP ,Blue SMD LED		
6	LD306	DIODE,LED,CHIP	EDLH0006001	Blue ,1608 ,R/TP ,Blue SMD LED		
6	LD307	DIODE,LED,CHIP	EDLH0006001	Blue ,1608 ,R/TP ,Blue SMD LED		
6	LD308	DIODE,LED,CHIP	EDLH0006001	Blue ,1608 ,R/TP ,Blue SMD LED		
6	LD309	DIODE,LED,CHIP	EDLH0006001	Blue ,1608 ,R/TP ,Blue SMD LED		
6	R301	RES,CHIP	ERHY0000213	47 ohm,1/16W,J,1005,R/TP		
6	R302	RES,CHIP	ERHY0000213	47 ohm,1/16W,J,1005,R/TP		
6	R304	RES,CHIP	ERHY0000237	680 ohm,1/16W,J,1005,R/TP		
6	R307	RES,CHIP	ERHY0000225	200 ohm,1/16W,J,1005,R/TP		
6	R308	RES,CHIP	ERHY0000225	200 ohm,1/16W,J,1005,R/TP		
6	R309	RES,CHIP	ERHY0000225	200 ohm,1/16W,J,1005,R/TP		
6	R310	RES,CHIP	ERHY0000225	200 ohm,1/16W,J,1005,R/TP		
6	R312	RES,CHIP	ERHY0000225	200 ohm,1/16W,J,1005,R/TP		
6	R313	RES,CHIP	ERHY0000225	200 ohm,1/16W,J,1005,R/TP		
6	R314	RES,CHIP	ERHY0000225	200 ohm,1/16W,J,1005,R/TP		
6	R315	RES,CHIP	ERHY0000225	200 ohm,1/16W,J,1005,R/TP		
6	R316	RES,CHIP	ERHY0000225	200 ohm,1/16W,J,1005,R/TP		
6	R317	RES,CHIP	ERHY0000225	200 ohm,1/16W,J,1005,R/TP		
6	R320	RES,CHIP	ERHY0000203	10 ohm,1/16W,J,1005,R/TP		
6	VA202	VARISTOR	SEVY0003901	5.5 V, ,SMD ,480pF, 1005		
6	VA203	VARISTOR	SEVY0003901	5.5 V, ,SMD ,480pF, 1005		
6	VA204	VARISTOR	SEVY0003901	5.5 V, ,SMD ,480pF, 1005		

11. EXPLODED VIEW & REPLACEMENT PART LIST

Level	Location No.	Description	Part Number	Specification	Color	Remark
6	VA205	VARISTOR	SEVY0003901	5.5 V, ,SMD ,480pF, 1005		
6	VA304	VARISTOR	SEVY0001001	14 V, ,SMD ,50pF, 1005		
6	VA305	VARISTOR	SEVY0003901	5.5 V, ,SMD ,480pF, 1005		
6	VA306	VARISTOR	SEVY0003901	5.5 V, ,SMD ,480pF, 1005		
6	VA307	VARISTOR	SEVY0003901	5.5 V, ,SMD ,480pF, 1005		
6	VA308	VARISTOR	SEVY0003901	5.5 V, ,SMD ,480pF, 1005		
6	VA309	VARISTOR	SEVY0003901	5.5 V, ,SMD ,480pF, 1005		
6	VA310	VARISTOR	SEVY0003901	5.5 V, ,SMD ,480pF, 1005		
6	VA311	VARISTOR	SEVY0003901	5.5 V, ,SMD ,480pF, 1005		
6	VA312	VARISTOR	SEVY0003901	5.5 V, ,SMD ,480pF, 1005		
6	VA313	VARISTOR	SEVY0003901	5.5 V, ,SMD ,480pF, 1005		
6	VA314	VARISTOR	SEVY0003901	5.5 V, ,SMD ,480pF, 1005		
5	SPFY00	PCB,MAIN	SPFY0119001	FR-4 ,1 mm,MULTI-8 ,		

10.3 Accessory

Note: This Chapter is used for reference, Part order is ordered by SBOM standard on GCSC

Level	Location No.	Description	Part Number	Specification	Color	Remark
3	SBPL00	BATTERY PACK,LI-ION	SBPL0077901	3.7 V,830 mAh,1 CELL,PRISMATIC ,FG101 RUSSV423450, Innerpack	Without Color	
3	SGEY00	ADAPTOR,AC-DC	SSAD0007828	100-240V ,60 Hz,5.2 V,800 mA,CE,CB,GOST ,EU PLUG(24P),STD		

Note